US ARMY CORPS
OF ENGINEERS
LOUISVILLE DISTRICT

AQUATIC NUISANCE SPECIES CONTROL REPORT WABASH-MAUMEE BASIN FORT WAYNE, INDIANA

APPENDIX G

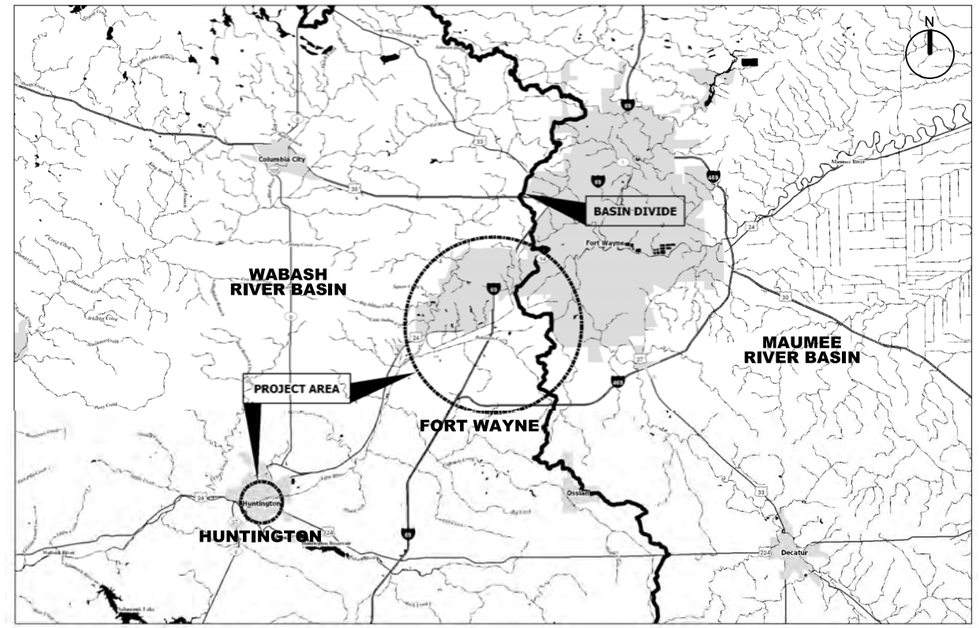

VICINITY MAP

NO SCALE

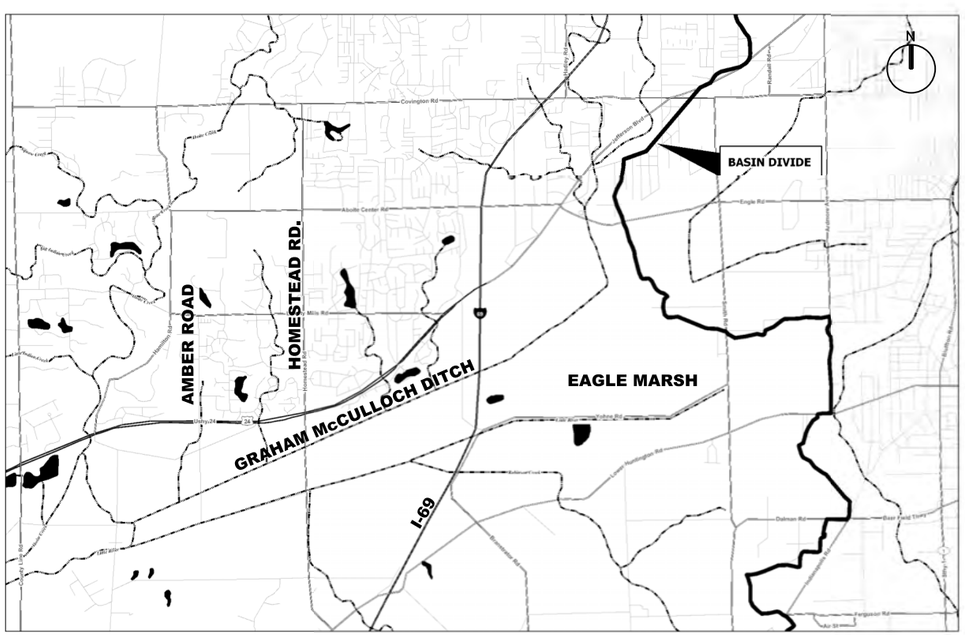

FORT WAYNE LOCATION MAP

NO SCALE

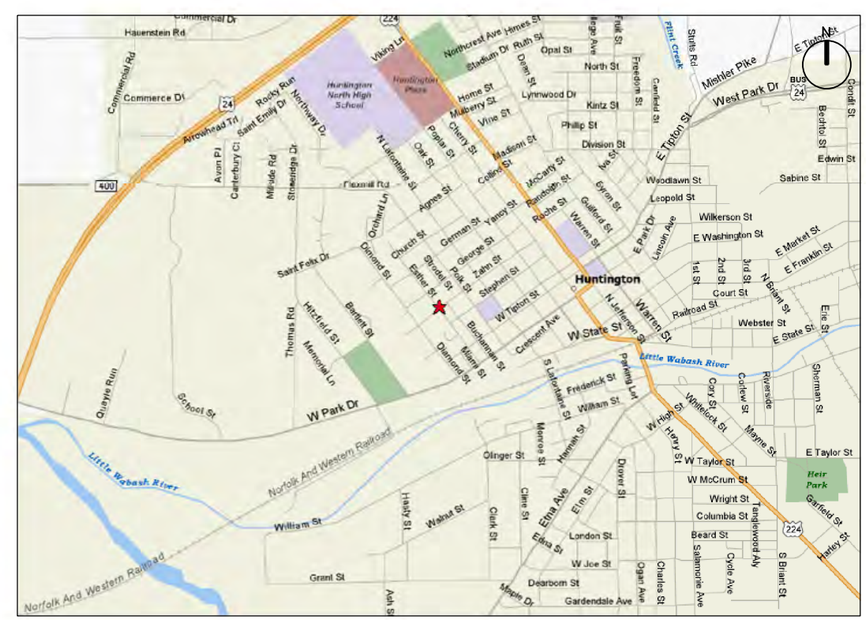

HUNTINGTON LOCATION MAP

NO SCALE

US ARMY CORPS
OF ENGINEERS
LOUISVILLE DISTRICT

SYMBOL	REVISIONS DESCRIPTION	DATE	APPR.

DESIGNED BY: B. JENNINGS
DRAWN BY: C. ROBINSON
CHECKED BY: B. DORSCH
B. JENNINGS, P.E.
PROJECT ENGINEER/ARCHITECT

DATE: FEBRUARY 2012
SCALE: AS SHOWN
DRAWING CODE: LR 5,6-12,1
DATE

AQUATIC NUISANCE SPECIES CONTROL REPORT
WABASH-MAUMEE BASIN
FORT WAYNE, INDIANA

COVER SHEET

SHEET REFERENCE NUMBER:
GI001
SHEET 1 OF 38

FINAL SUBMITTAL

FILE: \\lrl-fs01lou\Org\ED\Public\CAD\Civil\114597\CADD\114597GI001.DGN
DATE: 30-MAY-2012 11:51

SH. NO.	SH. REF.NO.	DESCRIPTION	FILENAME
		GENERAL	
1	GI001	COVER SHEET	114597GI001.DGN
2	GI002	INDEX OF DRAWINGS	114597GI002.DGN
		CIVIL	
3	CS100	OVERALL MAP	114597CS100.DGN
4	CS101	ALTERNATIVE A SITE PLAN	114597CS101.DGN
5	CS102	ALTERNATIVE B SITE PLAN	114597CS102.DGN
6	CS103	ALTERNATIVE C SITE PLAN	114597CS103.DGN
7	CS104	ALTERNATIVE C ENLARGED SITE PLAN	114597CS104.DGN
8	CS105	ALTERNATIVE D SITE PLAN	114597CS105.DGN
9	CS106	ALTERNATIVE D ENLARGED SITE PLAN	114597CS106.DGN
10	CS107	ALTERNATIVE E SITE PLAN	114597CS107.DGN
11	CS108	ALTERNATIVE F SITE PLAN	114597CS108.DGN
12	CS109	ALTERNATIVE G SITE PLAN	114597CS109.DGN
13	CS110	ALTERNATIVE G ENLARGED SITE PLAN	114597CS110.DGN
14	CS111	ALTERNATIVE H SITE PLAN (SH. 1 OF 2)	114597CS111.DGN
15	CS112	ALTERNATIVE H SITE PLAN (SH. 2 OF 2)	114597CS112.DGN
16	CS113	ALTERNATIVE I SITE PLAN (SH. 1 OF 2)	114597CS113.DGN
17	CS114	ALTERNATIVE I SITE PLAN (SH. 2 OF 2)	114597CS115.DGN
18	CZ001	MISCELLANEOUS DETAILS	114597CZ001.DGN
19	CZ002	FENCE DETAILS	114597CZ002.DGN
20	CZ003	FENCE DETAILS	114597CZ003.DGN
21	CZ004	CONCRETE PIER AND BAR SCREEN BARRIER DETAIL	114597CZ004.DGN
22	CZ005	PUMP STATION DETAILS	114597CZ005.DGN
23	CZ006	VERTICAL DROP STRUCTURE DETAILS	114597CZ006.DGN
24	CZ007	PIPE CULVERT HEADWALL DETAILS	114597CZ007.DGN
		RIGHT OF WAY	
25	RW101	ALTERNATIVE A RIGHT OF WAY PLAN	114597RW107.DGN
26	RW102	ALTERNATIVE B RIGHT OF WAY PLAN	114597RW108.DGN
27	RW103	ALTERNATIVE C RIGHT OF WAY PLAN	114597RW109.DGN
28	RW104	ALTERNATIVE C ENLARGED RIGHT OF WAY PLAN	114597RW110.DGN
29	RW105	ALTERNATIVE D RIGHT OF WAY PLAN	114597RW111.DGN
30	RW106	ALTERNATIVE D ENLARGED RIGHT OF WAY PLAN	114597RW112.DGN
31	RW107	ALTERNATIVE E RIGHT OF WAY PLAN	114597RW113.DGN
32	RW108	ALTERNATIVE F RIGHT OF WAY PLAN	114597RW114.DGN
33	RW109	ALTERNATIVE G RIGHT OF WAY PLAN	114597RW115.DGN
34	RW110	ALTERNATIVE G ENLARGED RIGHT OF WAY PLAN	114597RW116.DGN
35	RW111	ALTERNATIVE H RIGHT OF WAY PLAN (SH. 1 OF 2)	114597RW117.DGN
36	RW112	ALTERNATIVE H RIGHT OF WAY PLAN (SH. 2 OF 2)	114597RW118.DGN
37	RW113	ALTERNATIVE I RIGHT OF WAY PLAN (SH. 1 OF 2)	114597RW119.DGN
38	RW114	ALTERNATIVE I RIGHT OF WAY PLAN (SH. 2 OF 2)	114597RW120.DGN

US ARMY CORPS OF ENGINEERS
LOUISVILLE DISTRICT

REVISIONS

SYMBOL	DESCRIPTION	DATE	APPR.

DESIGNED BY: B. JENNINGS
DATE: FEBRUARY 2012
DRAWN BY: C. ROBINSON
SCALE: NONE
CHECKED BY: B. DORSCH
DRAWING CODE: LR 5,6-12,1
B. JENNINGS, P.E.
PROJECT ENGINEER/ARCHITECT
DATE

AQUATIC NUISANCE SPECIES CONTROL REPORT
WABASH-MAUMEE BASIN
FORT WAYNE, INDIANA

INDEX OF DRAWINGS

SHEET REFERENCE NUMBER:
GI002
SHEET 2 OF 38

FINAL SUBMITTAL

FILE: \\lrl-fs01lou\Org\ED\Public\CAD\Civil\114597\CADD\114597GI002.DGN
DATE: 30-MAY-2012 11:52

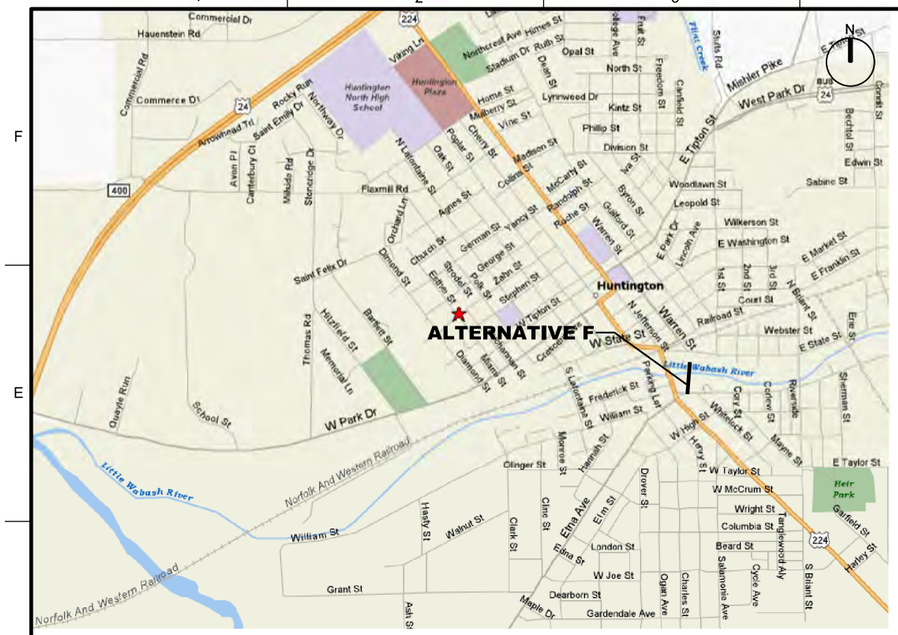

HUNTINGTON, INDIANA
NTS

ALTERNATIVES:

A: CONSTRUCT AN I-WALL, (EAGLE MARSH, BASIN DIVIDE)
B: CONSTRUCT A FENCE AND RECONSTRUCT LEFT DESCENDING GRAHAM MCCULLOCH DITCH BERM, (EAGLE MARSH, BASIN DIVIDE)
C: CONSTRUCT AN EARTHEN BERM AND PUMP STATION, (HOMESTEAD ROAD)
D: CONSTRUCT A PERMEABLE BERM WITH TELEMETERED SLUICE GATES, (AMBER ROAD)
E: CONSTRUCT A FENCE/EARTHEN BERM COMBINATION, (EAGLE MARSH, BASIN DIVIDE)
F: CONSTRUCT BAR SCREEN BARRIER AT EXISTING WEIR, (HUNTINGTON DAM)
G: CONSTRUCT VERTICAL DROP STRUCTURE WITH TELEMETERED SLUICE GATE,(HOMESTEAD ROAD)
H: RECONSTRUCT LEFT DESCENDING GRAHAM MCCULLOCH DITCH BERM, (EAGLE MARSH, BASIN DIVIDE)
I: RECONSTRUCT LEFT DESCENDING GRAHAM MCCULLOCH DITCH BERM, DEMOLISH RIGHT DESCENDING BERM, AND CONSTRUCT MULTI-CELL WETLAND AREA, (EAGLE MARSH, BASIN DIVIDE)

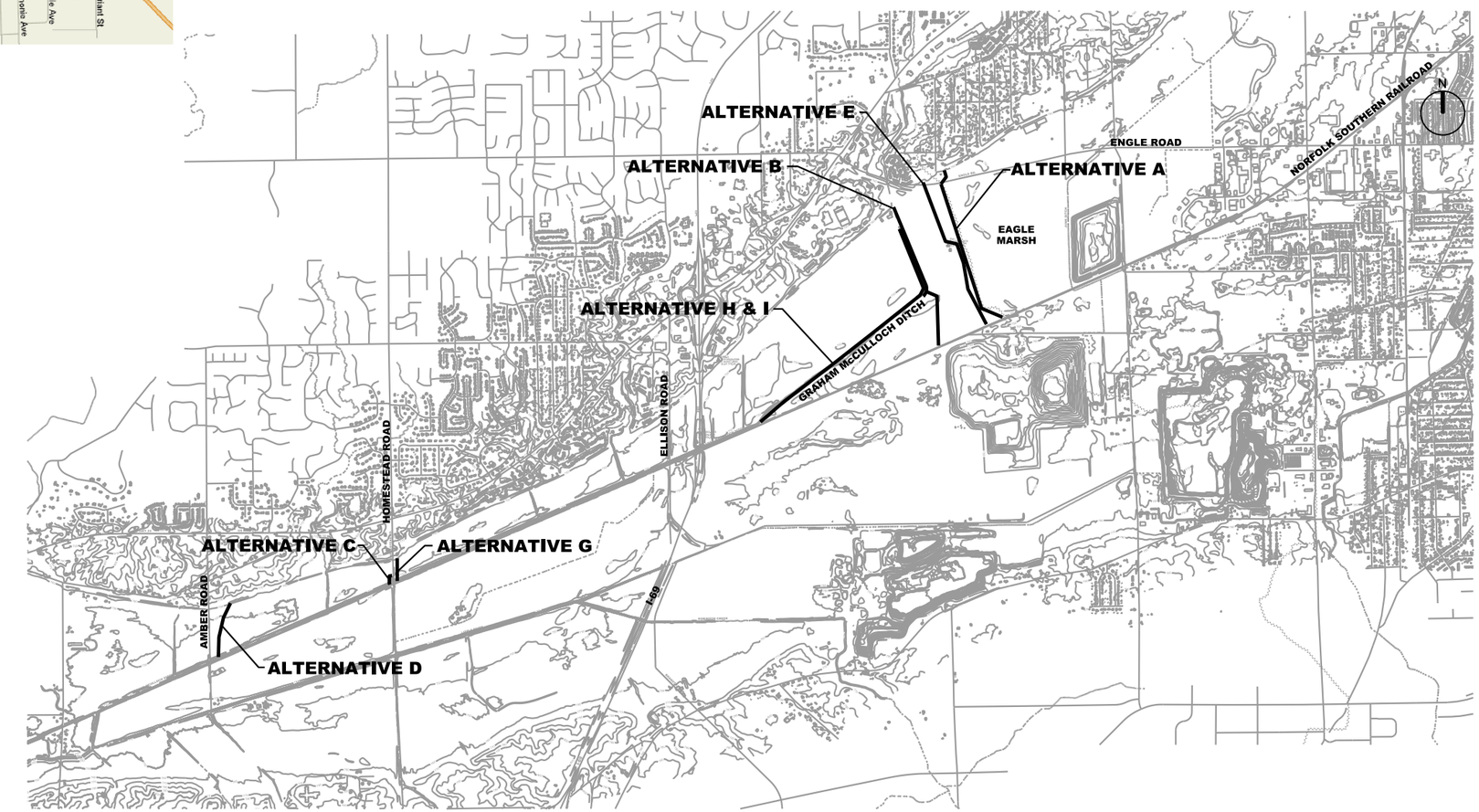

FORT WAYNE, INDIANA

US ARMY CORPS OF ENGINEERS
LOUISVILLE DISTRICT

SYMBOL	REVISIONS DESCRIPTION	DATE	APPR.

DESIGNED BY: B. JENNINGS
DRAWN BY: C. ROBINSON
CHECKED BY: B. DORSCH
B. JENNINGS, P.E.
PROJECT ENGINEER/ARCHITECT
DATE: FEBRUARY 2012
SCALE: AS SHOWN
DRAWING CODE: LR 5.6-12.1
DATE

AQUATIC NUISANCE SPECIES CONTROL FEASIBILITY STUDY
WABASH-MAUMEE BASIN
FORT WAYNE, INDIANA

OVERALL MAP

SHEET REFERENCE NUMBER:
CS100
SHEET 3 OF 38

FINAL SUBMITTAL

FILE: \\lrl-fs01lou\Org\ED\Public\CAD\Civil\114597\CADD\114597CS100.dgn
DATE: 30-MAY-2012 11:52

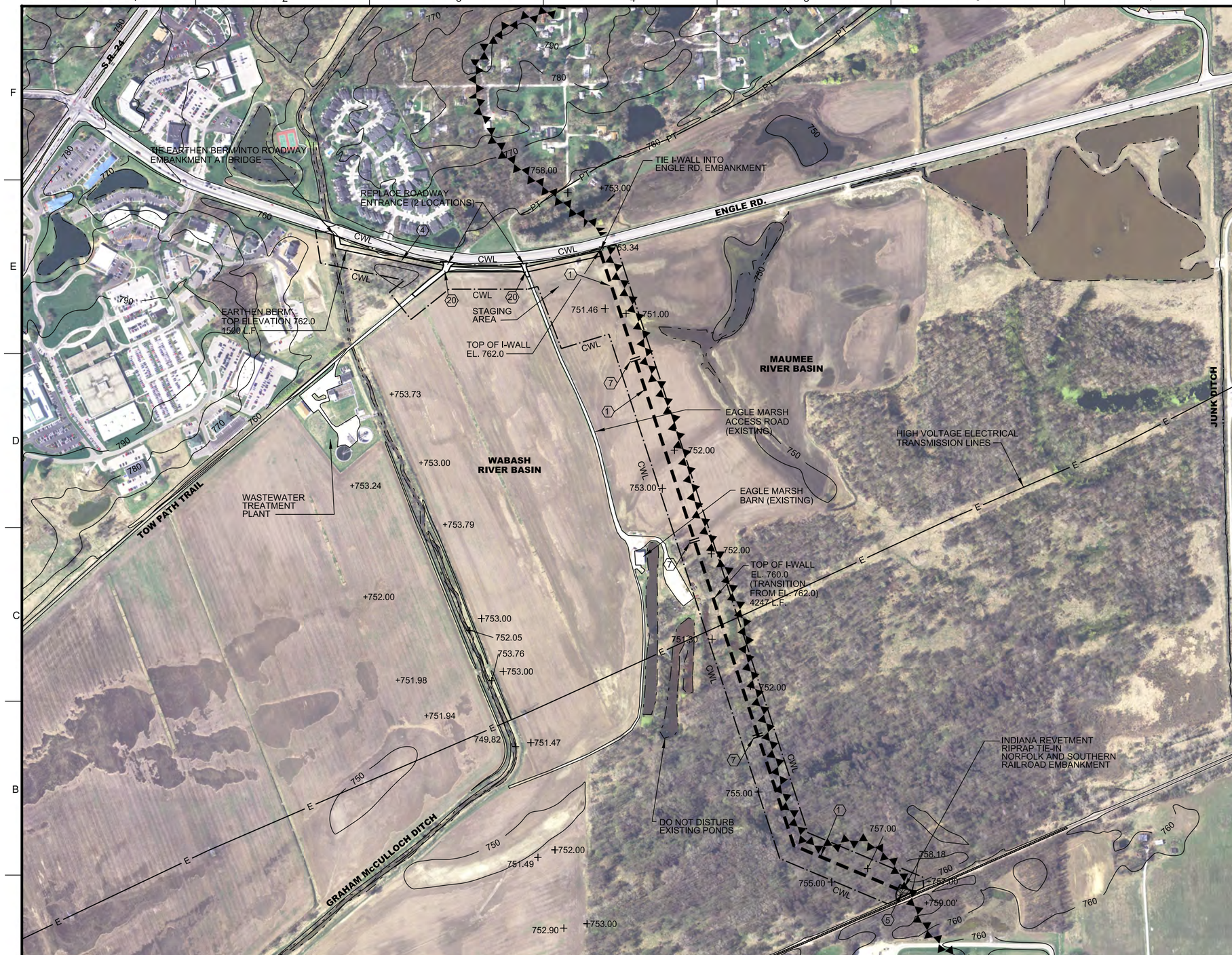

A1 ALTERNATIVE A CONSTRUCT I-WALL SITE PLAN

1"=300'

GENERAL SHEET NOTES

SHEET KEYNOTES

1 I-WALL, SEE DETAIL, SH. CZ001
2 FENCE , SEE DETAIL, SH. CZ002 & CZ003
3 DEMOLISH LEFT DESCENDING GRAHAM McCULLOCH DITCH BERM
4 EARTHEN BERM, SEE DETAIL, SH. CZ001
5 INDIANA REVETMENT RIPRAP
6 PUMP STATION (30' X 25'), SEE DETAILS, SH. CZ005
7 TERRESTRIAL ANIMAL CROSSING, SEE DETAIL SH. CZ001
8 GATEWELL/SLUICE GATE
9 PERMEABLE BERM, SEE DETAIL, SH. CZ001
10 DEBRIS FENCE, SEE DETAIL, SH. CZ003
11 FENCE / EARTHEN BERM, SEE DETAIL, SH. CZ001
12 METAL GATE, 15' WIDTH, SEE DETAIL, SH. CZ001
13 EQUIPMENT GATE STRUCTURE, SEE DETAIL SH. CZ002
14 FLAP GATE, SEE DETAIL, SH. CZ007
15 48" CMP
16 CONCRETE HEADWALL, SEE DETAIL, SH. CZ007
17 TRAPEZOIDAL DITCH, SEE DETAIL, SH. CZ001
18 TELEMETRY CONTROL STRUCTURE
19 HEAVY DUTY DEBRIS BOOM
20 ACCESS ROAD , SEE DETAIL, SH. CZ006
21 CONCRETE PIER AND BAR SCREEN BARRIER, SEE DETAIL, SH. CZ004
22 DEMOLISH RIGHT DESCENDING GRAHAM McCULLOCH DITCH BERM
23 MULTI-CELL WETLAND AREA (1800' x 100')
24 VERTICAL DROP STRUCTURE, SEE DETAIL SH. CZ006
25 VEGETATION FILTER STRIP (NATIVE TREES AND SHRUBS)
26 OUTLET PIPES, SEE DETAIL CZ006
27 RELOCATE EAGLE MARSH ACCESS ROAD, SEE DETAIL, SH. CZ006
28 DISCHARGE WELL (52' x 15')
29 PUMP STATION SUMP (101' x 47'), SEE DETAIL, SH. CZ005
30 SILT FENCE, SEE DETAIL, SH. CZ001

LEGEND

- I-WALL
- BASIN DIVIDE
- FENCE
- DEBRIS BOOM
- EARTHEN BERM
- FENCE/EARTHEN BERM
- INDIANA REVETMENT RIPRAP
- CWL — CONTRACTOR WORK LIMITS
- DEMOLISH STRUCTURE
- PT — POWER & TELEPHONE UTILITY LINES
- P — ELECTRIC UTILITY LINES

US ARMY CORPS OF ENGINEERS
LOUISVILLE DISTRICT

SYMBOL	REVISIONS DESCRIPTION	DATE	APPR.

DESIGNED BY: B. JENNINGS
DRAWN BY: C. ROBINSON
CHECKED BY: B. DORSCH
B. JENNINGS, P.E.
PROJECT ENGINEER/ARCHITECT

DATE: FEBRUARY 2012
SCALE: AS SHOWN
DRAWING CODE: LR 5,6-12,1
DATE

AQUATIC NUISANCE SPECIES
CONTROL PROJECT
WABASH-MAUMEE BASIN
FORT WAYNE, INDIANA

ALTERNATIVE A
SITE PLAN

SHEET REFERENCE NUMBER:
CS101

SHEET 4 OF 38

FINAL SUBMITTAL

FILE: \\lrl-fs01lou\Org\ED\Public\CAD\Civil\114597\CADD\114597CS101.DGN
DATE: 30-MAY-2012 11:52

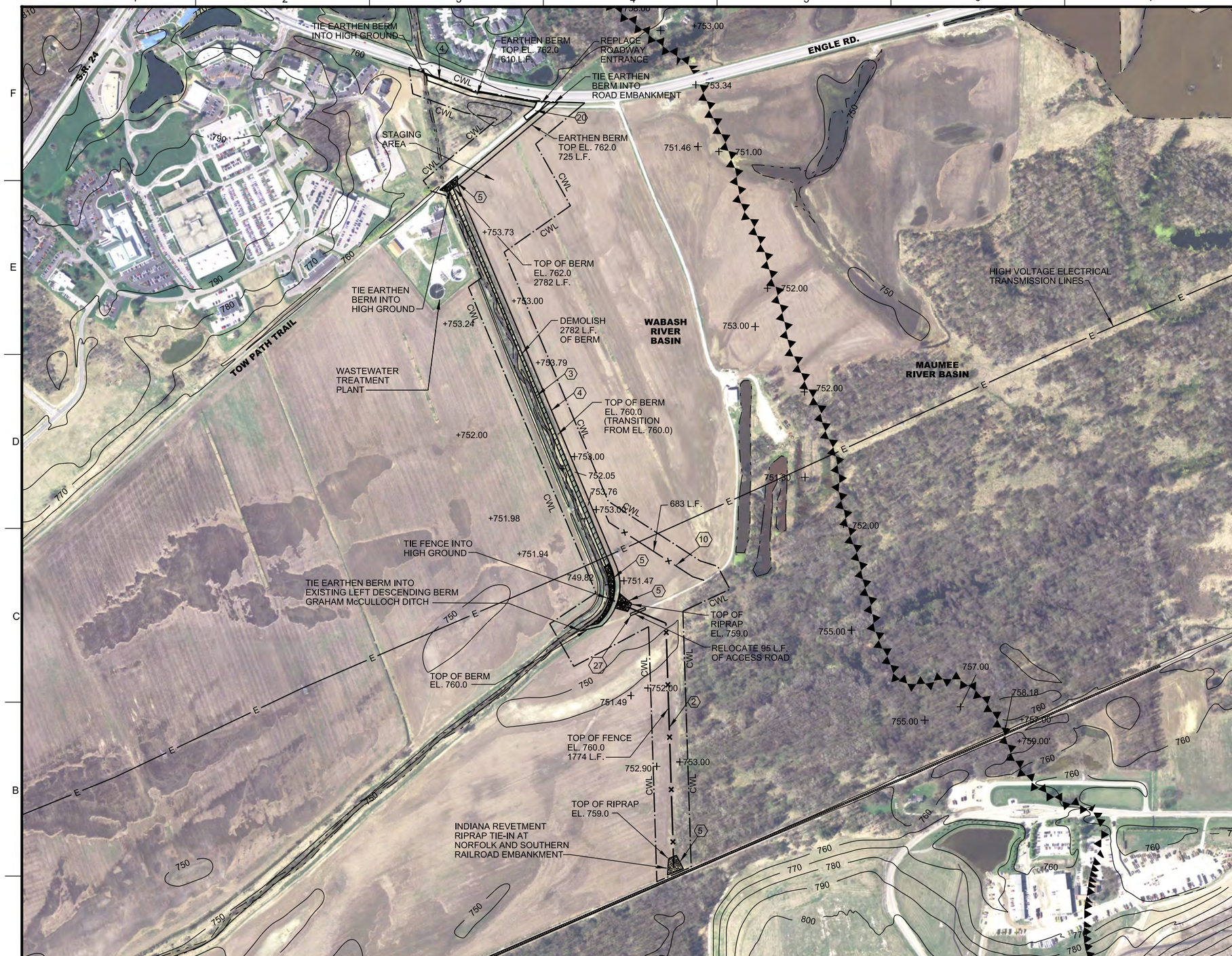

A1 ALTERNATIVE B CONSTRUCT FENCE AND RECONSTRUCT LEFT DESCENDING GRAHAM McCULLOCH BERM SITE PLAN

1"=300'

N

0 300' 600'

GENERAL SHEET NOTES

SHEET KEYNOTES

1 I-WALL, SEE DETAIL, SH. CZ001
2 FENCE , SEE DETAIL, SH. CZ002 & CZ003
3 DEMOLISH LEFT DESCENDING GRAHAM McCULLOCH DITCH BERM
4 EARTHEN BERM, SEE DETAIL, SH. CZ001
5 INDIANA REVETMENT RIPRAP
6 PUMP STATION (30' X 25'), SEE DETAILS, SH. CZ005
7 TERRESTRIAL ANIMAL CROSSING, SEE DETAIL SH. CZ001
8 GATEWELL/SLUICE GATE
9 PERMEABLE BERM, SEE DETAIL, SH. CZ001
10 DEBRIS FENCE, SEE DETAIL, SH. CZ003
11 FENCE / EARTHEN BERM, SEE DETAIL, SH. CZ001
12 METAL GATE, 15' WIDTH, SEE DETAIL, SH. CZ001
13 EQUIPMENT GATE STRUCTURE, SEE DETAIL SH. CZ002
14 FLAP GATE, SEE DETAIL, SH. CZ007
15 48" CMP
16 CONCRETE HEADWALL, SEE DETAIL, SH. CZ007
17 TRAPEZOIDAL DITCH, SEE DETAIL, SH. CZ001
18 TELEMETRY CONTROL STRUCTURE
19 HEAVY DUTY DEBRIS BOOM
20 ACCESS ROAD , SEE DETAIL, SH. CZ006
21 CONCRETE PIER AND BAR SCREEN BARRIER, SEE DETAIL, SH. CZ004
22 DEMOLISH RIGHT DESCENDING GRAHAM McCULLOCH DITCH BERM
23 MULTI-CELL WETLAND AREA (1800' x 100')
24 VERTICAL DROP STRUCTURE, SEE DETAIL SH. CZ006
25 VEGETATION FILTER STRIP (NATIVE TREES AND SHRUBS)
26 OUTLET PIPES, SEE DETAIL CZ006
27 RELOCATE EAGLE MARSH ACCESS ROAD, SEE DETAIL, SH. CZ006
28 DISCHARGE WELL (52' x 15')
29 PUMP STATION SUMP (101' x 47'), SEE DETAIL, SH. CZ005
30 SILT FENCE, SEE DETAIL, SH. CZ001

LEGEND

- I-WALL
- BASIN DIVIDE
- FENCE
- DEBRIS BOOM
- EARTHEN BERM
- FENCE/EARTHEN BERM
- INDIANA REVETMENT RIPRAP
- CWL — CONTRACTOR WORK LIMITS
- DEMOLISH STRUCTURE
- PT — POWER & TELEPHONE UTILITY LINES
- P — ELECTRIC UTILITY LINES

US ARMY CORPS OF ENGINEERS
LOUISVILLE DISTRICT

SYMBOL	REVISIONS DESCRIPTION	DATE	APPR.

DESIGNED BY: B. JENNINGS — DATE: FEBRUARY 2012
DRAWN BY: C. ROBINSON — SCALE: AS SHOWN
CHECKED BY: B. DORSCH — DRAWING CODE: LR 5,6-12,1
B. JENNINGS, P.E. PROJECT ENGINEER/ARCHITECT — DATE

AQUATIC NUISANCE SPECIES CONTROL PILOT PROJECT
WABASH-MAUMEE BASIN
FORT WAYNE, INDIANA

ALTERNATIVE B SITE PLAN

SHEET REFERENCE NUMBER: CS102

SHEET 5 OF 38

FINAL SUBMITTAL

FILE: \\lrl-fs01lou\Org\ED\Public\CAD\Civil\114597\CADD\114597CS102.DGN
DATE: 30-MAY-2012 11:53

A1 ALTERNATIVE C CONSTRUCT EARTHEN BERM AND PUMP STATION SITE PLAN
1"=300'

GENERAL SHEET NOTES

SHEET KEYNOTES

1 I-WALL, SEE DETAIL, SH. CZ001
2 FENCE , SEE DETAIL, SH. CZ002 & CZ003
3 DEMOLISH LEFT DESCENDING GRAHAM McCULLOCH DITCH BERM
4 EARTHEN BERM, SEE DETAIL, SH. CZ001
5 INDIANA REVETMENT RIPRAP
6 PUMP STATION (30' X 25'), SEE DETAILS, SH. CZ005
7 TERRESTRIAL ANIMAL CROSSING, SEE DETAIL SH. CZ001
8 GATEWELL/SLUICE GATE
9 PERMEABLE BERM, SEE DETAIL, SH. CZ001
10 DEBRIS FENCE, SEE DETAIL, SH. CZ003
11 FENCE / EARTHEN BERM, SEE DETAIL, SH. CZ001
12 METAL GATE, 15' WIDTH, SEE DETAIL, SH. CZ001
13 EQUIPMENT GATE STRUCTURE, SEE DETAIL SH. CZ002
14 FLAP GATE, SEE DETAIL, SH. CZ007
15 48" CMP
16 CONCRETE HEADWALL, SEE DETAIL, SH. CZ007
17 TRAPEZOIDAL DITCH, SEE DETAIL, SH. CZ001
18 TELEMETRY CONTROL STRUCTURE
19 HEAVY DUTY DEBRIS BOOM
20 ACCESS ROAD , SEE DETAIL, SH. CZ006
21 CONCRETE PIER AND BAR SCREEN BARRIER, SEE DETAIL, SH. CZ004
22 DEMOLISH RIGHT DESCENDING GRAHAM McCULLOCH DITCH BERM
23 MULTI-CELL WETLAND AREA (1800' x 100')
24 VERTICAL DROP STRUCTURE, SEE DETAIL SH. CZ006
25 VEGETATION FILTER STRIP (NATIVE TREES AND SHRUBS)
26 OUTLET PIPES, SEE DETAIL CZ006
27 RELOCATE EAGLE MARSH ACCESS ROAD, SEE DETAIL, SH. CZ006
28 DISCHARGE WELL (52' x 15')
29 PUMP STATION SUMP (101' x 47'), SEE DETAIL, SH. CZ005
30 SILT FENCE, SEE DETAIL, SH. CZ001

LEGEND

I-WALL
BASIN DIVIDE
FENCE
DEBRIS BOOM
EARTHEN BERM
FENCE/EARTHEN BERM
INDIANA REVETMENT RIPRAP
CWL — CONTRACTOR WORK LIMITS
DEMOLISH STRUCTURE
PT — POWER & TELEPHONE UTILITY LINES
P — ELECTRIC UTILITY LINES

US ARMY CORPS OF ENGINEERS
LOUISVILLE DISTRICT

SYMBOL	REVISIONS DESCRIPTION	DATE	APPR.

DESIGNED BY: B. JENNINGS
DRAWN BY: C. ROBINSON
CHECKED BY: B. DORSCH
B. JENNINGS, P.E.
PROJECT ENGINEER/ARCHITECT
DATE
DATE: FEBRUARY 2012
SCALE: AS SHOWN
DRAWING CODE: LR 5,6-12,1

AQUATIC NUISANCE SPECIES CONTROL REPORT
WABASH-MAUMEE BASIN
FORT WAYNE, INDIANA

ALTERNATIVE C SITE PLAN

SHEET REFERENCE NUMBER:
CS103
SHEET 6 OF 38

FINAL SUBMITTAL

FILE: \\lrl-fs01\lou\Org\ED\Public\CAD\Civil\114597\CADD\114597CS103.DGN
DATE: 30-MAY-2012 11:53

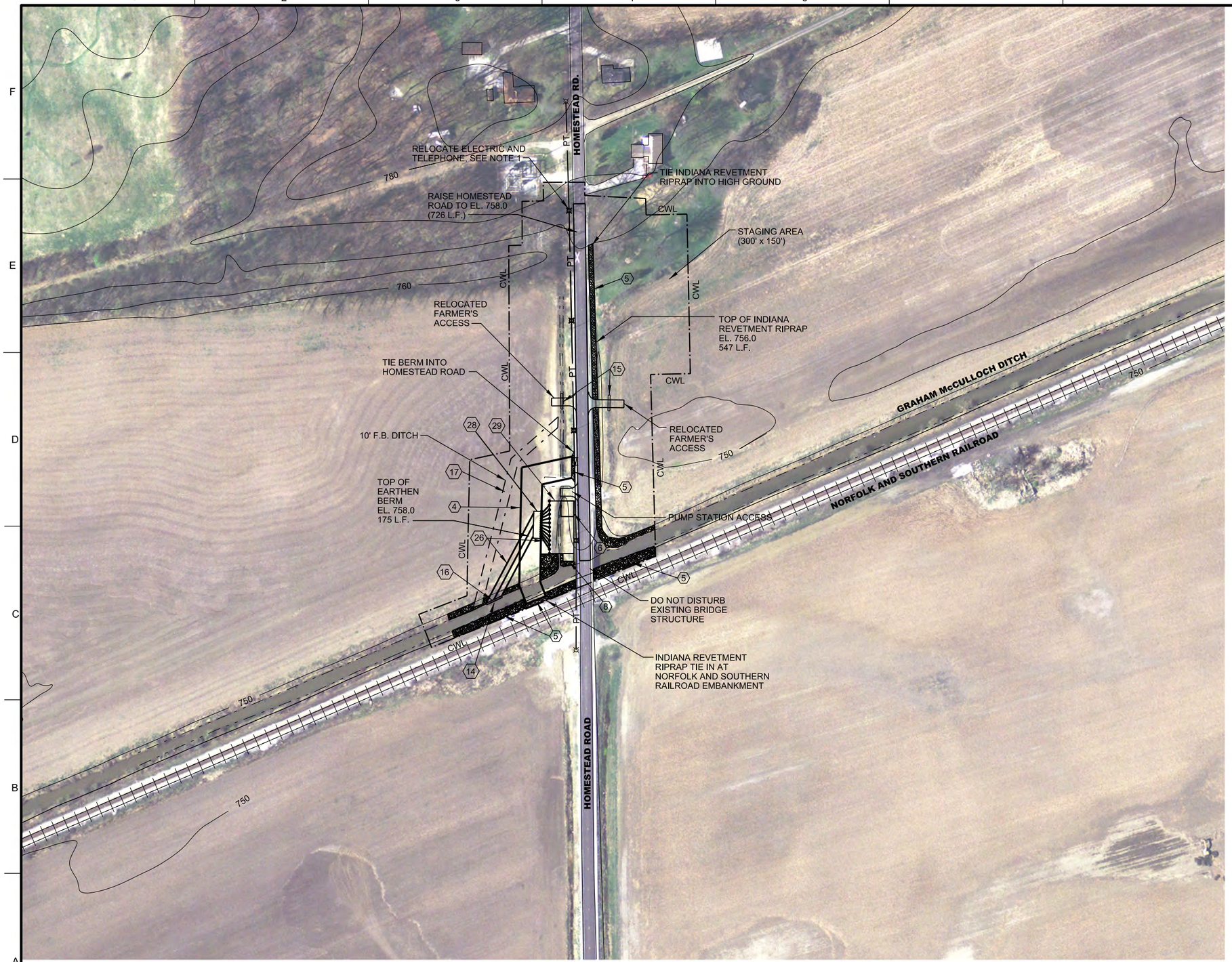

A1 ALTERNATIVE C CONSTRUCT EARTHEN BERM AND PUMP STATION ENLARGED SITE PLAN

1"=100'

0 100' 200'

GENERAL SHEET NOTES

1. RELOCATE APPROXIMATELY 1055 L.F. OF POWER AND TELEPHONE AND 4 JOINT-USE UTILITY POLES.
2. BURIED FIBER OPTIC CABLE NOT TO BE DISTURBED.
3. REMOVE EXISTING 18" CMP UNDER FARMER'S ACCESS.
4. PUMP STATION STRUCTURE TO BE 30' x 25'.
5. PUMP DISCHARGE PIPES WILL BE 48" (8) ANFD 30" (3) IN DIAMETER. EACH WILL HAVE FLAP GATE (11 TOTAL).

SHEET KEYNOTES

1 I-WALL, SEE DETAIL, SH. CZ001
2 FENCE , SEE DETAIL, SH. CZ002 & CZ003
3 DEMOLISH LEFT DESCENDING GRAHAM McCULLOCH DITCH BERM
4 EARTHEN BERM, SEE DETAIL, SH. CZ001
5 INDIANA REVETMENT RIPRAP
6 PUMP STATION (30' X 25'), SEE DETAILS, SH. CZ005
7 TERRESTRIAL ANIMAL CROSSING, SEE DETAIL SH. CZ001
8 GATEWELL/SLUICE GATE
9 PERMEABLE BERM, SEE DETAIL, SH. CZ001
10 DEBRIS FENCE, SEE DETAIL, SH. CZ003
11 FENCE / EARTHEN BERM, SEE DETAIL, SH. CZ001
12 METAL GATE, 15' WIDTH, SEE DETAIL, SH. CZ001
13 EQUIPMENT GATE STRUCTURE, SEE DETAIL SH. CZ002
14 FLAP GATE, SEE DETAIL, SH. CZ007
15 48" CMP
16 CONCRETE HEADWALL, SEE DETAIL, SH. CZ007
17 TRAPEZOIDAL DITCH, SEE DETAIL, SH. CZ001
18 TELEMETRY CONTROL STRUCTURE
19 HEAVY DUTY DEBRIS BOOM
20 ACCESS ROAD , SEE DETAIL, SH. CZ006
21 CONCRETE PIER AND BAR SCREEN BARRIER, SEE DETAIL, SH. CZ004
22 DEMOLISH RIGHT DESCENDING GRAHAM McCULLOCH DITCH BERM
23 MULTI-CELL WETLAND AREA (1800' x 100')
24 VERTICAL DROP STRUCTURE, SEE DETAIL SH. CZ006
25 VEGETATION FILTER STRIP (NATIVE TREES AND SHRUBS)
26 OUTLET PIPES, SEE DETAIL CZ006
27 RELOCATE EAGLE MARSH ACCESS ROAD, SEE DETAIL, SH. CZ006
28 DISCHARGE WELL (52' x 15')
29 PUMP STATION SUMP (101' x 47'), SEE DETAIL, SH. CZ005
30 SILT FENCE, SEE DETAIL, SH. CZ001

LEGEND

I-WALL
BASIN DIVIDE
FENCE
DEBRIS BOOM
EARTHEN BERM
FENCE/EARTHEN BERM
INDIANA REVETMENT RIPRAP
CWL CONTRACTOR WORK LIMITS
DEMOLISH STRUCTURE
PT POWER & TELEPHONE UTILITY LINES
P ELECTRIC UTILITY LINES

US ARMY CORPS OF ENGINEERS
LOUISVILLE DISTRICT

SYMBOL	REVISIONS DESCRIPTION	DATE	APPR.

DESIGNED BY: B. JENNINGS
DRAWN BY: C. ROBINSON
CHECKED BY: B. DORSCH
B. JENNINGS, P.E. PROJECT ENGINEER/ARCHITECT

DATE: FEBRUARY 2012
SCALE: AS SHOWN
DRAWING CODE: LR 5,6-12,1
DATE

AQUATIC NUISANCE SPECIES CONTROL REPORT
WABASH-MAUMEE BASIN
FORT WAYNE, INDIANA

ALTERNATIVE C
ENLARGED SITE PLAN

SHEET REFERENCE NUMBER:
CS104
SHEET 7 OF 38

FINAL SUBMITTAL

FILE: \\lrl-fs01lou\Org\ED\Public\CAD\Civil\114597\CADD\114597CS104.DGN
DATE: 30-MAY-2012 11:54

GENERAL SHEET NOTES

1. THE PROPOSED SLUICE GATE ON GRAHAM MULLOCH DITCH WILL OPEN/CLOSE BASED ON THE USGS STREAM GAGES AS SHOWN ON THE MAP INSERT AT THE TOP OF SHEET CS106.
2. BURIED FIBER OPTIC CABLE NOT TO BE DISTURBED.

SHEET KEYNOTES

1 I-WALL, SEE DETAIL, SH. CZ001
2 FENCE , SEE DETAIL, SH. CZ002 & CZ003
3 DEMOLISH LEFT DESCENDING GRAHAM McCULLOCH DITCH BERM
4 EARTHEN BERM, SEE DETAIL, SH. CZ001
5 INDIANA REVETMENT RIPRAP
6 PUMP STATION (30' X 25'), SEE DETAILS, SH. CZ005
7 TERRESTRIAL ANIMAL CROSSING, SEE DETAIL SH. CZ001
8 GATEWELL/SLUICE GATE
9 PERMEABLE BERM, SEE DETAIL, SH. CZ001
10 DEBRIS FENCE, SEE DETAIL, SH. CZ003
11 FENCE / EARTHEN BERM, SEE DETAIL, SH. CZ001
12 METAL GATE, 15' WIDTH, SEE DETAIL, SH. CZ001
13 EQUIPMENT GATE STRUCTURE, SEE DETAIL SH. CZ002
14 FLAP GATE, SEE DETAIL, SH. CZ007
15 48" CMP
16 CONCRETE HEADWALL, SEE DETAIL, SH. CZ007
17 TRAPEZOIDAL DITCH, SEE DETAIL, SH. CZ001
18 TELEMETRY CONTROL STRUCTURE
19 HEAVY DUTY DEBRIS BOOM
20 ACCESS ROAD , SEE DETAIL, SH. CZ006
21 CONCRETE PIER AND BAR SCREEN BARRIER, SEE DETAIL, SH. CZ004
22 DEMOLISH RIGHT DESCENDING GRAHAM McCULLOCH DITCH BERM
23 MULTI-CELL WETLAND AREA (1800' x 100')
24 VERTICAL DROP STRUCTURE, SEE DETAIL SH. CZ006
25 VEGETATION FILTER STRIP (NATIVE TREES AND SHRUBS)
26 OUTLET PIPES, SEE DETAIL CZ006
27 RELOCATE EAGLE MARSH ACCESS ROAD, SEE DETAIL, SH. CZ006
28 DISCHARGE WELL (52' x 15')
29 PUMP STATION SUMP (101' x 47'), SEE DETAIL, SH. CZ005
30 SILT FENCE, SEE DETAIL, SH. CZ001

LEGEND

I-WALL
BASIN DIVIDE
FENCE
DEBRIS BOOM
EARTHEN BERM
FENCE/EARTHEN BERM
INDIANA REVETMENT RIPRAP
CWL — CONTRACTOR WORK LIMITS
DEMOLISH STRUCTURE
PT — POWER & TELEPHONE UTILITY LINES
P — ELECTRIC UTILITY LINES

A1 ALTERNATIVE D CONSTRUCT PERMEABLE BERM WITH TELEMETERED SLUICE GATES SITE PLAN
1"=300'

N

0 300' 600'

US ARMY CORPS OF ENGINEERS
LOUISVILLE DISTRICT

SYMBOL	REVISIONS DESCRIPTION	DATE	APPR.

DESIGNED BY: B. JENNINGS
DRAWN BY: C. ROBINSON
CHECKED BY: B. DORSCH
B. JENNINGS, P.E.
PROJECT ENGINEER/ARCHITECT

DATE: FEBRUARY 2012
SCALE: AS SHOWN
DRAWING CODE: LR 5,6-12,1
DATE

AQUATIC NUISANCE SPECIES CONTROL PROJECT
WABASH-MAUMEE BASIN
FORT WAYNE, INDIANA

ALTERNATIVE D
SITE PLAN

SHEET REFERENCE NUMBER:
CS105
SHEET 8 OF 38

FINAL SUBMITTAL

FILE: \\lrl-fs01lou\Org\ED\Public\CAD\Civil\114597\CADD\114597CS105.DGN
DATE: 30-MAY-2012 11:54

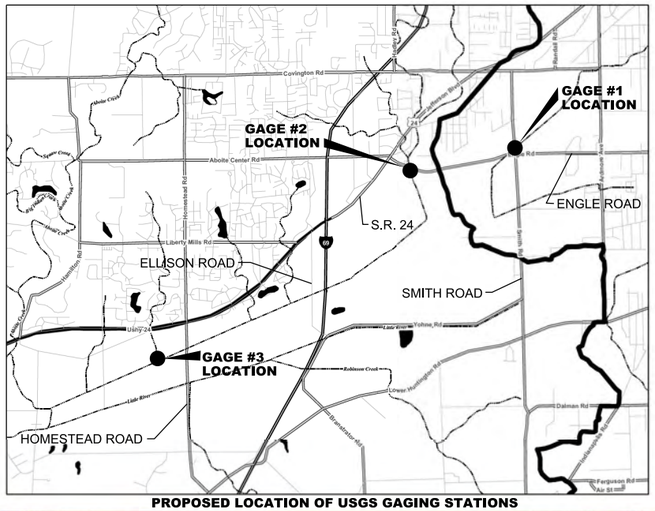

PROPOSED LOCATION OF USGS GAGING STATIONS

A1 ALTERNATIVE D CONSTRUCT PERMEABLE BERM WITH TELEMETERED SLUICE GATES ENLARGED SITE PLAN

1"=100'

GENERAL SHEET NOTES

1. THE PROPOSED SLUICE GATE ON GRAHAM-MULLOCH DITCH WILL OPEN/CLOSE BASED ON THE USGS STREAM GAGES AS SHOWN ON THE MAP INSERT AT THE TOP OF THE PAGE.
2. BURIED FIBER OPTIC CABLE NOT TO BE DISTURBED.

SHEET KEYNOTES

1 I-WALL, SEE DETAIL, SH. CZ001
2 FENCE , SEE DETAIL, SH. CZ002 & CZ003
3 DEMOLISH LEFT DESCENDING GRAHAM McCULLOCH DITCH BERM
4 EARTHEN BERM, SEE DETAIL, SH. CZ001
5 INDIANA REVETMENT RIPRAP
6 PUMP STATION (30' X 25'), SEE DETAILS, SH. CZ005
7 TERRESTRIAL ANIMAL CROSSING, SEE DETAIL SH. CZ001
8 GATEWELL/SLUICE GATE
9 PERMEABLE BERM, SEE DETAIL, SH. CZ001
10 DEBRIS FENCE, SEE DETAIL, SH. CZ003
11 FENCE / EARTHEN BERM, SEE DETAIL, SH. CZ001
12 METAL GATE, 15' WIDTH, SEE DETAIL, SH. CZ001
13 EQUIPMENT GATE STRUCTURE, SEE DETAIL SH. CZ002
14 FLAP GATE, SEE DETAIL, SH. CZ007
15 48" CMP
16 CONCRETE HEADWALL, SEE DETAIL, SH. CZ007
17 TRAPEZOIDAL DITCH, SEE DETAIL, SH. CZ001
18 TELEMETRY CONTROL STRUCTURE
19 HEAVY DUTY DEBRIS BOOM
20 ACCESS ROAD , SEE DETAIL, SH. CZ006
21 CONCRETE PIER AND BAR SCREEN BARRIER, SEE DETAIL, SH. CZ004
22 DEMOLISH RIGHT DESCENDING GRAHAM McCULLOCH DITCH BERM
23 MULTI-CELL WETLAND AREA (1800' x 100')
24 VERTICAL DROP STRUCTURE, SEE DETAIL SH. CZ006
25 VEGETATION FILTER STRIP (NATIVE TREES AND SHRUBS)
26 OUTLET PIPES, SEE DETAIL CZ006
27 RELOCATE EAGLE MARSH ACCESS ROAD, SEE DETAIL, SH. CZ006
28 DISCHARGE WELL (52' x 15')
29 PUMP STATION SUMP (101' x 47'), SEE DETAIL, SH. CZ005
30 SILT FENCE, SEE DETAIL, SH. CZ001

LEGEND

I-WALL
BASIN DIVIDE
FENCE
DEBRIS BOOM
EARTHEN BERM
FENCE/EARTHEN BERM
INDIANA REVETMENT RIPRAP
CWL — CONTRACTOR WORK LIMITS
DEMOLISH STRUCTURE
PT — POWER & TELEPHONE UTILITY LINES
P — ELECTRIC UTILITY LINES

US ARMY CORPS OF ENGINEERS
LOUISVILLE DISTRICT

SYMBOL	DESCRIPTION	DATE	APPR.

REVISIONS

DESIGNED BY: B. JENNINGS
DRAWN BY: C. ROBINSON
CHECKED BY: B. DORSCH
B. JENNINGS P.E. PROJECT ENGINEER/ARCHITECT

DATE: FEBRUARY 2012
SCALE: AS SHOWN
DRAWING CODE: LR 5,6-12,1
DATE

AQUATIC NUISANCE SPECIES CONTROL PROJECT
WABASH-MAUMEE BASIN
FORT WAYNE, INDIANA

ALTERNATIVE D
ENLARGED SITE PLAN

SHEET REFERENCE NUMBER:
CS106

SHEET 9 OF 38

FINAL SUBMITTAL

FILE: \\lrl-fs01lou\Org\ED\Public\CAD\Civil\114597\CADD\114597CS106.DGN
DATE: 30-MAY-2012 11:55

A1 ALTERNATIVE E CONSTRUCT FENCE / EARTHEN BERM COMBINATION SITE PLAN

1"=300'

GENERAL SHEET NOTES

SHEET KEYNOTES

1 I-WALL, SEE DETAIL, SH. CZ001
2 FENCE , SEE DETAIL, SH. CZ002 & CZ003
3 DEMOLISH LEFT DESCENDING GRAHAM McCULLOCH DITCH BERM
4 EARTHEN BERM, SEE DETAIL, SH. CZ001
5 INDIANA REVETMENT RIPRAP
6 PUMP STATION (30' X 25'), SEE DETAILS, SH. CZ005
7 TERRESTRIAL ANIMAL CROSSING, SEE DETAIL SH. CZ001
8 GATEWELL/SLUICE GATE
9 PERMEABLE BERM, SEE DETAIL, SH. CZ001
10 DEBRIS FENCE, SEE DETAIL, SH. CZ003
11 FENCE / EARTHEN BERM, SEE DETAIL, SH. CZ001
12 METAL GATE, 15' WIDTH, SEE DETAIL, SH. CZ001
13 EQUIPMENT GATE STRUCTURE, SEE DETAIL SH. CZ002
14 FLAP GATE, SEE DETAIL, SH. CZ007
15 48" CMP
16 CONCRETE HEADWALL, SEE DETAIL, SH. CZ007
17 TRAPEZOIDAL DITCH, SEE DETAIL, SH. CZ001
18 TELEMETRY CONTROL STRUCTURE
19 HEAVY DUTY DEBRIS BOOM
20 ACCESS ROAD , SEE DETAIL, SH. CZ006
21 CONCRETE PIER AND BAR SCREEN BARRIER, SEE DETAIL, SH. CZ004
22 DEMOLISH RIGHT DESCENDING GRAHAM McCULLOCH DITCH BERM
23 MULTI-CELL WETLAND AREA (1800' x 100')
24 VERTICAL DROP STRUCTURE, SEE DETAIL SH. CZ006
25 VEGETATION FILTER STRIP (NATIVE TREES AND SHRUBS)
26 OUTLET PIPES, SEE DETAIL CZ006
27 RELOCATE EAGLE MARSH ACCESS ROAD, SEE DETAIL, SH. CZ006
28 DISCHARGE WELL (52' x 15')
29 PUMP STATION SUMP (101' x 47'), SEE DETAIL, SH. CZ005
30 SILT FENCE, SEE DETAIL, SH. CZ001

LEGEND

I-WALL
BASIN DIVIDE
FENCE
DEBRIS BOOM
EARTHEN BERM
FENCE/EARTHEN BERM
INDIANA REVETMENT RIPRAP
CWL — CONTRACTOR WORK LIMITS
DEMOLISH STRUCTURE
PT — POWER & TELEPHONE UTILITY LINES
P — ELECTRIC UTILITY LINES

US ARMY CORPS OF ENGINEERS
LOUISVILLE DISTRICT

SYMBOL	REVISIONS DESCRIPTION	DATE	APPR.

DESIGNED BY: B. JENNINGS
DRAWN BY: C. ROBINSON
CHECKED BY: B. DORSCH
B. JENNINGS, P.E. PROJECT ENGINEER/ARCHITECT
DATE: FEBRUARY 2012
SCALE: AS SHOWN
DRAWING CODE: LR 5,6-12,1
DATE

AQUATIC NUISANCE SPECIES CONTROL PILOT PROJECT WABASH-MAUMEE BASIN FORT WAYNE, INDIANA

ALTERNATIVE E SITE PLAN

SHEET REFERENCE NUMBER: CS107

SHEET 10 OF 38

FINAL SUBMITTAL

FILE: \\lrl-fs01lou\Org\ED\Public\CAD\Civil\114597\CADD\114597CS107.DGN
DATE: 30-MAY-2012 11:55

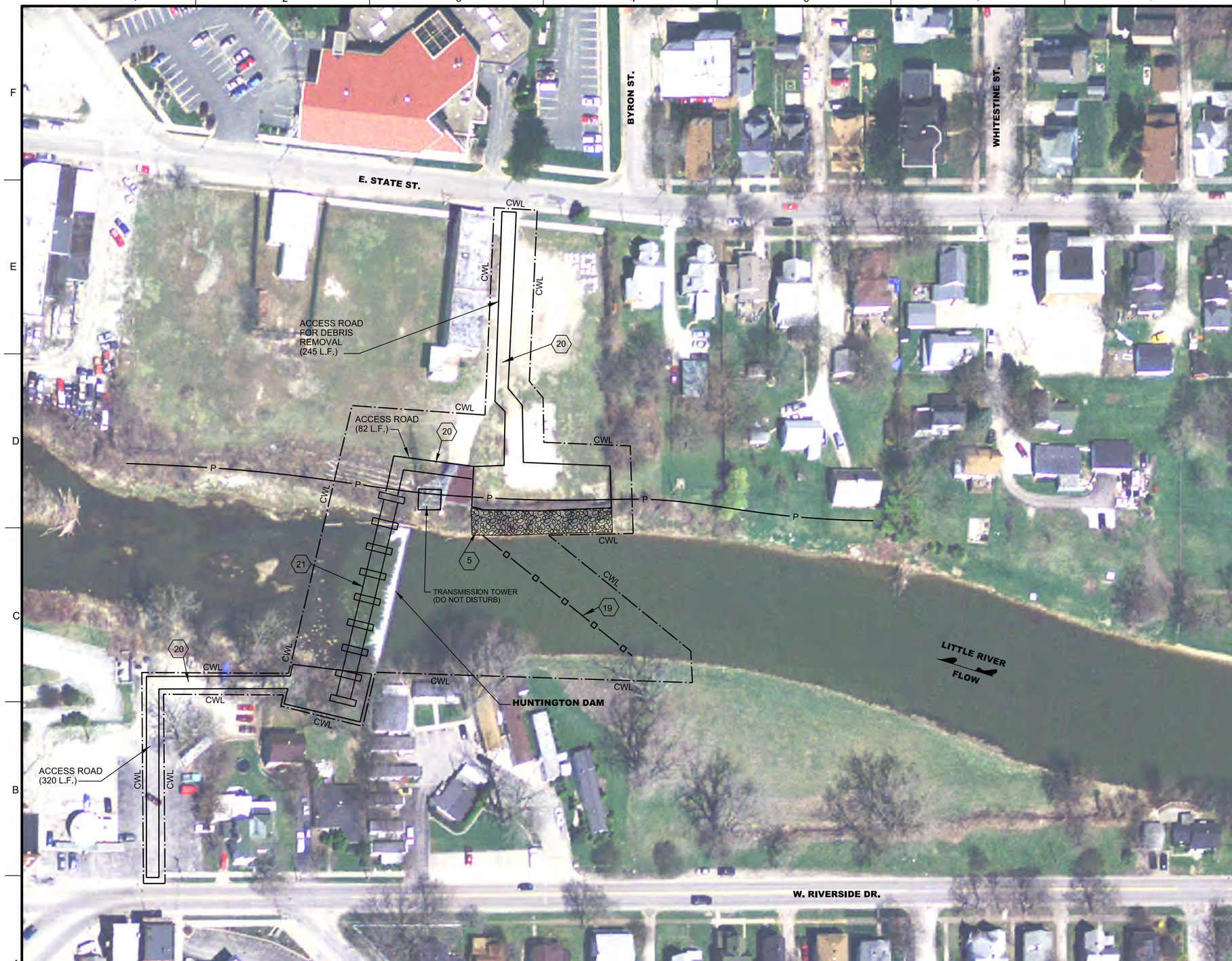

A1 ALTERNATIVE F CONSTRUCT BAR SCREEN BARRIER AT EXISTING WEIR

1"=50'

N

0 50' 100'

GENERAL SHEET NOTES

1. HUNTINGTON DAM IS A FIXED CREST WEIR WHICH PROVIDES A VERTICAL DROP OF APPROXIMATELY 6'.

SHEET KEYNOTES

1 I-WALL, SEE DETAIL, SH. CZ001
2 FENCE , SEE DETAIL, SH. CZ002 & CZ003
3 DEMOLISH LEFT DESCENDING GRAHAM McCULLOCH DITCH BERM
4 EARTHEN BERM, SEE DETAIL, SH. CZ001
5 INDIANA REVETMENT RIPRAP
6 PUMP STATION (30' X 25'), SEE DETAILS, SH. CZ005
7 TERRESTRIAL ANIMAL CROSSING, SEE DETAIL SH. CZ001
8 GATEWELL/SLUICE GATE
9 PERMEABLE BERM, SEE DETAIL, SH. CZ001
10 DEBRIS FENCE, SEE DETAIL, SH. CZ003
11 FENCE / EARTHEN BERM, SEE DETAIL, SH. CZ001
12 METAL GATE, 15' WIDTH, SEE DETAIL, SH. CZ001
13 EQUIPMENT GATE STRUCTURE, SEE DETAIL SH. CZ002
14 FLAP GATE, SEE DETAIL, SH. CZ007
15 48" CMP
16 CONCRETE HEADWALL, SEE DETAIL, SH. CZ007
17 TRAPEZOIDAL DITCH, SEE DETAIL, SH. CZ001
18 TELEMETRY CONTROL STRUCTURE
19 HEAVY DUTY DEBRIS BOOM
20 ACCESS ROAD , SEE DETAIL, SH. CZ006
21 CONCRETE PIER AND BAR SCREEN BARRIER, SEE DETAIL, SH. CZ004
22 DEMOLISH RIGHT DESCENDING GRAHAM McCULLOCH DITCH BERM
23 MULTI-CELL WETLAND AREA (1800' x 100')
24 VERTICAL DROP STRUCTURE, SEE DETAIL SH. CZ006
25 VEGETATION FILTER STRIP (NATIVE TREES AND SHRUBS)
26 OUTLET PIPES, SEE DETAIL CZ006
27 RELOCATE EAGLE MARSH ACCESS ROAD, SEE DETAIL, SH. CZ006
28 DISCHARGE WELL (52' x 15')
29 PUMP STATION SUMP (101' x 47'), SEE DETAIL, SH. CZ005
30 SILT FENCE, SEE DETAIL, SH. CZ001

LEGEND

I-WALL
BASIN DIVIDE
FENCE
DEBRIS BOOM
EARTHEN BERM
FENCE/EARTHEN BERM
INDIANA REVETMENT RIPRAP
CWL — CONTRACTOR WORK LIMITS
DEMOLISH STRUCTURE
PT — POWER & TELEPHONE UTILITY LINES
P — ELECTRIC UTILITY LINES

US ARMY CORPS OF ENGINEERS
LOUISVILLE DISTRICT

SYMBOL	DESCRIPTION	DATE	APPR.

REVISIONS

DESIGNED BY: B. JENNINGS
DATE: FEBRUARY 2012
DRAWN BY: C. ROBINSON
SCALE: 1"=50'
CHECKED BY: B. DORSCH
DRAWING CODE: LR 5,6-12,1
B. JENNINGS, P.E. PROJECT ENGINEER/ARCHITECT
DATE

AQUATIC NUISANCE SPECIES CONTROL REPORT FILE
WABASH-MAUMEE BASIN
FORT WAYNE, INDIANA

ALTERNATIVE F SITE PLAN

SHEET REFERENCE NUMBER:
CS108
SHEET 11 OF 38

FINAL SUBMITTAL

FILE: \\lrl-fs01lou\Org\ED\Public\CAD\Civil\114597\CADD\114597CS108.DGN
DATE: 30-MAY-2012 11:56

A1 ALTERNATIVE G CONSTRUCT VERTICAL DROP STRUCTURES W/ TELEMETERED SLUICE GATE - SITE PLAN

1"=300'

N

0 300' 600'

GENERAL SHEET NOTES

1. THE PROPOSED SLUICE GATE ON GRAHAM-MULLOCH DITCH WILL OPEN/CLOSE BASED ON THE USGS STREAM GAGES AS SHOWN ON THE MAP INSERT AT THE TOP OF THE PAGE.
2. BURIED FIBER OPTIC CABLE NOT TO BE DISTURBED.

SHEET KEYNOTES

1 I-WALL, SEE DETAIL, SH. CZ001
2 FENCE , SEE DETAIL, SH. CZ002 & CZ003
3 DEMOLISH LEFT DESCENDING GRAHAM McCULLOCH DITCH BERM
4 EARTHEN BERM, SEE DETAIL, SH. CZ001
5 INDIANA REVETMENT RIPRAP
6 PUMP STATION (30' X 25'), SEE DETAILS, SH. CZ005
7 TERRESTRIAL ANIMAL CROSSING, SEE DETAIL SH. CZ001
8 GATEWELL/SLUICE GATE
9 PERMEABLE BERM, SEE DETAIL, SH. CZ001
10 DEBRIS FENCE, SEE DETAIL, SH. CZ003
11 FENCE / EARTHEN BERM, SEE DETAIL, SH. CZ001
12 METAL GATE, 15' WIDTH, SEE DETAIL, SH. CZ001
13 EQUIPMENT GATE STRUCTURE, SEE DETAIL SH. CZ002
14 FLAP GATE, SEE DETAIL, SH. CZ007
15 48" CMP
16 CONCRETE HEADWALL, SEE DETAIL, SH. CZ007
17 TRAPEZOIDAL DITCH, SEE DETAIL, SH. CZ001
18 TELEMETRY CONTROL STRUCTURE
19 HEAVY DUTY DEBRIS BOOM
20 ACCESS ROAD , SEE DETAIL, SH. CZ006
21 CONCRETE PIER AND BAR SCREEN BARRIER, SEE DETAIL, SH. CZ004
22 DEMOLISH RIGHT DESCENDING GRAHAM McCULLOCH DITCH BERM
23 MULTI-CELL WETLAND AREA (1800' x 100')
24 VERTICAL DROP STRUCTURE, SEE DETAIL SH. CZ006
25 VEGETATION FILTER STRIP (NATIVE TREES AND SHRUBS)
26 OUTLET PIPES, SEE DETAIL CZ006
27 RELOCATE EAGLE MARSH ACCESS ROAD, SEE DETAIL, SH. CZ006
28 DISCHARGE WELL (52' x 15')
29 PUMP STATION SUMP (101' x 47'), SEE DETAIL, SH. CZ005
30 SILT FENCE, SEE DETAIL, SH. CZ001

LEGEND

I-WALL
BASIN DIVIDE
FENCE
DEBRIS BOOM
EARTHEN BERM
FENCE/EARTHEN BERM
INDIANA REVETMENT RIPRAP
CWL — CONTRACTOR WORK LIMITS
DEMOLISH STRUCTURE
PT — POWER & TELEPHONE UTILITY LINES
P — ELECTRIC UTILITY LINES

US ARMY CORPS OF ENGINEERS
LOUISVILLE DISTRICT

SYMBOL	REVISIONS DESCRIPTION	DATE	APPR.

DESIGNED BY: B. JENNINGS
DRAWN BY: C. ROBINSON
CHECKED BY: B. DORSCH
B. JENNINGS, P.E.
PROJECT ENGINEER/ARCHITECT
DATE
DATE: FEBRUARY 2012
SCALE: AS SHOWN
DRAWING CODE: LR 5,6-12,1

AQUATIC NUISANCE SPECIES CONTROL PILOT PROJECT
WABASH-MAUMEE BASIN
FORT WAYNE, INDIANA

ALTERNATIVE G
SITE PLAN

SHEET REFERENCE NUMBER:
CS109
SHEET 12 OF 38

FINAL SUBMITTAL

FILE: \\lrl-fs01lou\Org\ED\Public\CAD\Civil\114597\CADD\114597CS109.DGN
DATE: 30-MAY-2012 11:56

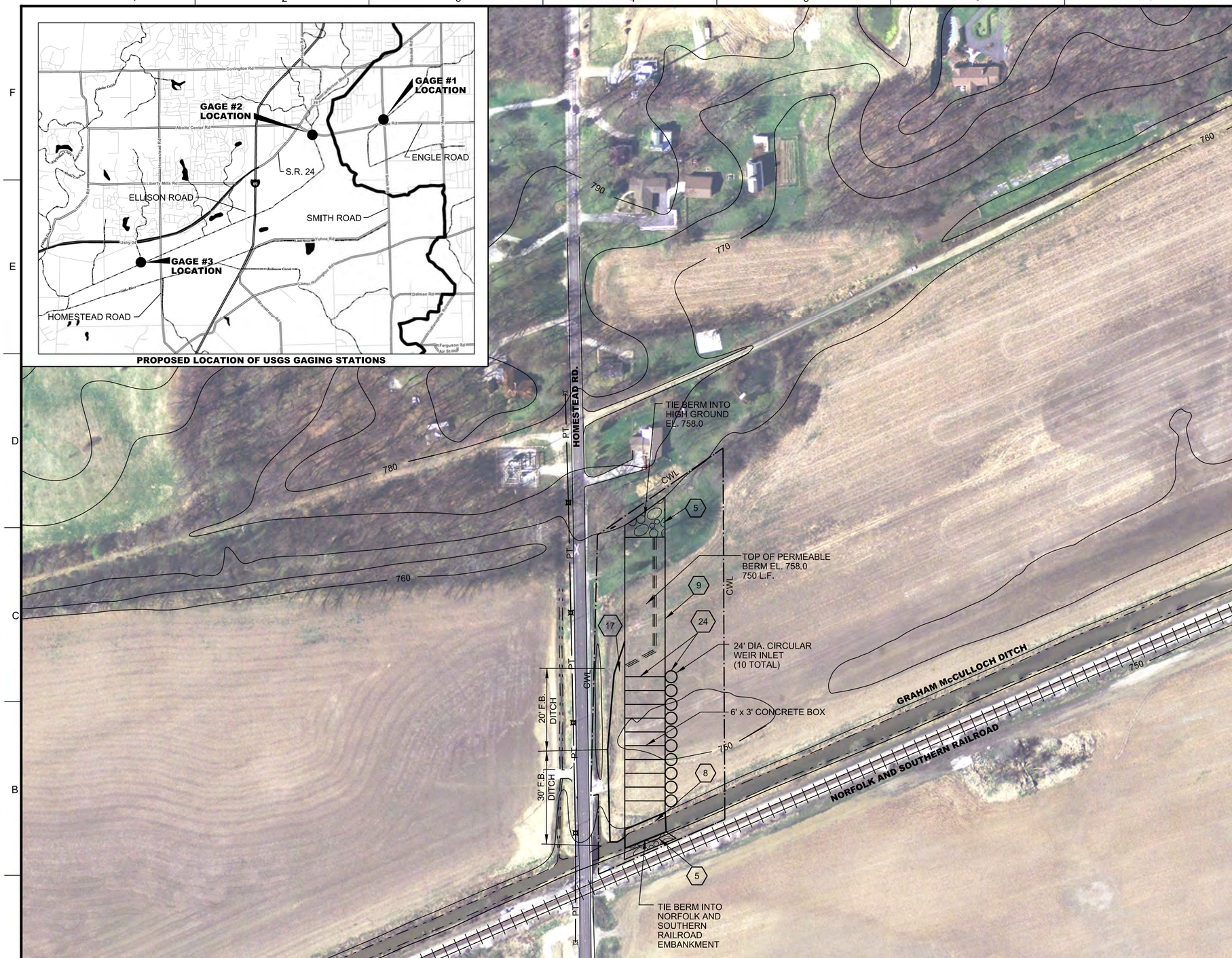

A1 ALTERNATIVE G CONSTRUCT VERTICAL DROP STRUCTURES W/ TELEMETERED SLUICE GATE - ENLARGED SITE PLAN

1"=100'

N

0 100' 200'

GENERAL SHEET NOTES

1. THE PROPOSED SLUICE GATE ON GRAHAM-MULLOCH DITCH WILL OPEN/CLOSE BASED ON THE USGS STREAM GAGES AS SHOWN ON THE MAP INSERT AT THE TOP OF THE PAGE.
2. BURIED FIBER OPTIC CABLE NOT TO BE DISTURBED.

SHEET KEYNOTES

1 I-WALL, SEE DETAIL, SH. CZ001
2 FENCE , SEE DETAIL, SH. CZ002 & CZ003
3 DEMOLISH LEFT DESCENDING GRAHAM McCULLOCH DITCH BERM
4 EARTHEN BERM, SEE DETAIL, SH. CZ001
5 INDIANA REVETMENT RIPRAP
6 PUMP STATION (30' X 25'), SEE DETAILS, SH. CZ005
7 TERRESTRIAL ANIMAL CROSSING, SEE DETAIL SH. CZ001
8 GATEWELL/SLUICE GATE
9 PERMEABLE BERM, SEE DETAIL, SH. CZ001
10 DEBRIS FENCE, SEE DETAIL, SH. CZ003
11 FENCE / EARTHEN BERM, SEE DETAIL, SH. CZ001
12 METAL GATE, 15' WIDTH, SEE DETAIL, SH. CZ001
13 EQUIPMENT GATE STRUCTURE, SEE DETAIL SH. CZ002
14 FLAP GATE, SEE DETAIL, SH. CZ007
15 48" CMP
16 CONCRETE HEADWALL, SEE DETAIL, SH. CZ007
17 TRAPEZOIDAL DITCH, SEE DETAIL, SH. CZ001
18 TELEMETRY CONTROL STRUCTURE
19 HEAVY DUTY DEBRIS BOOM
20 ACCESS ROAD , SEE DETAIL, SH. CZ006
21 CONCRETE PIER AND BAR SCREEN BARRIER, SEE DETAIL, SH. CZ004
22 DEMOLISH RIGHT DESCENDING GRAHAM McCULLOCH DITCH BERM
23 MULTI-CELL WETLAND AREA (1800' x 100')
24 VERTICAL DROP STRUCTURE, SEE DETAIL SH. CZ006
25 VEGETATION FILTER STRIP (NATIVE TREES AND SHRUBS)
26 OUTLET PIPES, SEE DETAIL CZ006
27 RELOCATE EAGLE MARSH ACCESS ROAD, SEE DETAIL, SH. CZ006
28 DISCHARGE WELL (52' x 15')
29 PUMP STATION SUMP (101' x 47'), SEE DETAIL, SH. CZ005
30 SILT FENCE, SEE DETAIL, SH. CZ001

LEGEND

I-WALL
BASIN DIVIDE
FENCE
DEBRIS BOOM
EARTHEN BERM
FENCE/EARTHEN BERM
INDIANA REVETMENT RIPRAP
CWL — CONTRACTOR WORK LIMITS
DEMOLISH STRUCTURE
PT — POWER & TELEPHONE UTILITY LINES
P — ELECTRIC UTILITY LINES

US ARMY CORPS OF ENGINEERS
LOUISVILLE DISTRICT

REVISIONS			
SYMBOL	DESCRIPTION	DATE	APPR.

DESIGNED BY: B. JENNINGS
DRAWN BY: C. ROBINSON
CHECKED BY: B. DORSCH
B. JENNINGS, P.E.
PROJECT ENGINEER/ARCHITECT

DATE: FEBRUARY 2012
SCALE: AS SHOWN
DRAWING CODE: LR 5,6-12,1
DATE

AQUATIC NUISANCE SPECIES
CONTROL PROJECT
WABASH-MAUMEE BASIN
FORT WAYNE, INDIANA

ALTERNATIVE G
ENLARGED SITE PLAN

SHEET REFERENCE NUMBER:
CS110

SHEET 13 OF 38

FINAL SUBMITTAL

FILE: \\lrl-fs01lou\Org\ED\Public\CAD\Civil\114597\CADD\114597CS110.DGN
DATE: 30-MAY-2012 11:57

GENERAL SHEET NOTES

1. THE PROPOSED GRAHAM McCULLOCH BERM IS TO BE LOCATED APPROX. ON ITS EXISTING ALIGNMENT AS SHOWN ON THE PLANS.
2. THE GRAHAM McCULLOCH DITCH TOP OF BERM HEIGHT DECREASES FROM EL. 761.0 (UPSTREAM) TO EL. 759.0 (DOWNSTREAM).

SHEET KEYNOTES

1 I-WALL, SEE DETAIL, SH. CZ001
2 FENCE , SEE DETAIL, SH. CZ002 & CZ003
3 DEMOLISH LEFT DESCENDING GRAHAM McCULLOCH DITCH BERM
4 EARTHEN BERM, SEE DETAIL, SH. CZ001
5 INDIANA REVETMENT RIPRAP
6 PUMP STATION (30' X 25'), SEE DETAILS, SH. CZ005
7 TERRESTRIAL ANIMAL CROSSING, SEE DETAIL SH. CZ001
8 GATEWELL/SLUICE GATE
9 PERMEABLE BERM, SEE DETAIL, SH. CZ001
10 DEBRIS FENCE, SEE DETAIL, SH. CZ003
11 FENCE / EARTHEN BERM, SEE DETAIL, SH. CZ001
12 METAL GATE, 15' WIDTH, SEE DETAIL, SH. CZ001
13 EQUIPMENT GATE STRUCTURE, SEE DETAIL SH. CZ002
14 FLAP GATE, SEE DETAIL, SH. CZ007
15 48" CMP
16 CONCRETE HEADWALL, SEE DETAIL, SH. CZ007
17 TRAPEZOIDAL DITCH, SEE DETAIL, SH. CZ001
18 TELEMETRY CONTROL STRUCTURE
19 HEAVY DUTY DEBRIS BOOM
20 ACCESS ROAD , SEE DETAIL, SH. CZ006
21 CONCRETE PIER AND BAR SCREEN BARRIER, SEE DETAIL, SH. CZ004
22 DEMOLISH RIGHT DESCENDING GRAHAM McCULLOCH DITCH BERM
23 MULTI-CELL WETLAND AREA (1800' x 100')
24 VERTICAL DROP STRUCTURE, SEE DETAIL SH. CZ006
25 VEGETATION FILTER STRIP (NATIVE TREES AND SHRUBS)
26 OUTLET PIPES, SEE DETAIL CZ006
27 RELOCATE EAGLE MARSH ACCESS ROAD, SEE DETAIL, SH. CZ006
28 DISCHARGE WELL (52' x 15')
29 PUMP STATION SUMP (101' x 47'), SEE DETAIL, SH. CZ005
30 SILT FENCE, SEE DETAIL, SH. CZ001

LEGEND

I-WALL
BASIN DIVIDE
FENCE
DEBRIS BOOM
EARTHEN BERM
FENCE/EARTHEN BERM
INDIANA REVETMENT RIPRAP
CWL — CONTRACTOR WORK LIMITS
DEMOLISH STRUCTURE
PT — POWER & TELEPHONE UTILITY LINES
P — ELECTRIC UTILITY LINES

A1 ALTERNATIVE H RECONSTRUCT LEFT DESCENDING GRAHAM McCULLOCH DITCH BERM - SITE PLAN

1"=300'

N

0 300' 600'

US ARMY CORPS OF ENGINEERS
LOUISVILLE DISTRICT

SYMBOL	REVISIONS DESCRIPTION	DATE	APPR.

DESIGNED BY: B. JENNINGS
DRAWN BY: C. ROBINSON
CHECKED BY: B. DORSCH
B. JENNINGS, P.E.
PROJECT ENGINEER/ARCHITECT

DATE: FEBRUARY 2012
SCALE: AS SHOWN
DRAWING CODE: LR 5,6-12,1
DATE

AQUATIC NUISANCE SPECIES CONTROL PROJECT
WABASH-MAUMEE BASIN
FORT WAYNE, INDIANA

ALTERNATIVE H
SITE PLAN
(SH. 1 OF 2)

SHEET REFERENCE NUMBER:
CS111
SHEET 14 OF 38

FINAL SUBMITTAL

FILE: \\lrl-fs01lou\Org\ED\Public\CAD\Civil\114597\CADD\114597CS111.DGN
DATE: 30-MAY-2012 11:57

A1 ALTERNATIVE H RECONSTRUCT LEFT DESCENDING GRAHAM McCULLOCH DITCH BERM - SITE PLAN

1"=300'

GENERAL SHEET NOTES

1. THE PROPOSED GRAHAM McCULLOCH BERM IS TO BE LOCATED APPROX. ON ITS EXISTING ALIGNMENT AS SHOWN ON THE PLANS.
2. THE GRAHAM McCULLOCH DITCH TOP OF BERM HEIGHT DECREASES FROM EL. 761.0 (UPSTREAM) TO EL. 759.0 (DOWNSTREAM).

SHEET KEYNOTES

1 I-WALL, SEE DETAIL, SH. CZ001
2 FENCE , SEE DETAIL, SH. CZ002 & CZ003
3 DEMOLISH LEFT DESCENDING GRAHAM McCULLOCH DITCH BERM
4 EARTHEN BERM, SEE DETAIL, SH. CZ001
5 INDIANA REVETMENT RIPRAP
6 PUMP STATION (30' X 25'), SEE DETAILS, SH. CZ005
7 TERRESTRIAL ANIMAL CROSSING, SEE DETAIL SH. CZ001
8 GATEWELL/SLUICE GATE
9 PERMEABLE BERM, SEE DETAIL, SH. CZ001
10 DEBRIS FENCE, SEE DETAIL, SH. CZ003
11 FENCE / EARTHEN BERM, SEE DETAIL, SH. CZ001
12 METAL GATE, 15' WIDTH, SEE DETAIL, SH. CZ001
13 EQUIPMENT GATE STRUCTURE, SEE DETAIL SH. CZ002
14 FLAP GATE, SEE DETAIL, SH. CZ007
15 48" CMP
16 CONCRETE HEADWALL, SEE DETAIL, SH. CZ007
17 TRAPEZOIDAL DITCH, SEE DETAIL, SH. CZ001
18 TELEMETRY CONTROL STRUCTURE
19 HEAVY DUTY DEBRIS BOOM
20 ACCESS ROAD , SEE DETAIL, SH. CZ006
21 CONCRETE PIER AND BAR SCREEN BARRIER, SEE DETAIL, SH. CZ004
22 DEMOLISH RIGHT DESCENDING GRAHAM McCULLOCH DITCH BERM
23 MULTI-CELL WETLAND AREA (1800' x 100')
24 VERTICAL DROP STRUCTURE, SEE DETAIL SH. CZ006
25 VEGETATION FILTER STRIP (NATIVE TREES AND SHRUBS)
26 OUTLET PIPES, SEE DETAIL CZ006
27 RELOCATE EAGLE MARSH ACCESS ROAD, SEE DETAIL, SH. CZ006
28 DISCHARGE WELL (52' x 15')
29 PUMP STATION SUMP (101' x 47'), SEE DETAIL, SH. CZ005
30 SILT FENCE, SEE DETAIL, SH. CZ001

LEGEND

I-WALL
BASIN DIVIDE
FENCE
DEBRIS BOOM
EARTHEN BERM
FENCE/EARTHEN BERM
INDIANA REVETMENT RIPRAP
CWL — CONTRACTOR WORK LIMITS
DEMOLISH STRUCTURE
PT — POWER & TELEPHONE UTILITY LINES
P — ELECTRIC UTILITY LINES

US ARMY CORPS OF ENGINEERS
LOUISVILLE DISTRICT

SYMBOL	REVISIONS DESCRIPTION	DATE	APPR.

DESIGNED BY: B. JENNINGS
DATE: FEBRUARY 2012
DRAWN BY: C. ROBINSON
SCALE: AS SHOWN
CHECKED BY: B. DORSCH
DRAWING CODE: LR 5,6-12,1
B. JENNINGS, P.E. PROJECT ENGINEER/ARCHITECT
DATE

AQUATIC NUISANCE SPECIES CONTROL PILOT PROJECT
WABASH-MAUMEE BASIN
FORT WAYNE, INDIANA

ALTERNATIVE H SITE PLAN (SH. 2 OF 2)

SHEET REFERENCE NUMBER: CS112
SHEET 15 OF 38

FINAL SUBMITTAL

FILE: \\lrl-fs01lou\Org\ED\Public\CAD\Civil\114597\CADD\114597CS112.DGN
DATE: 30-MAY-2012 11:58

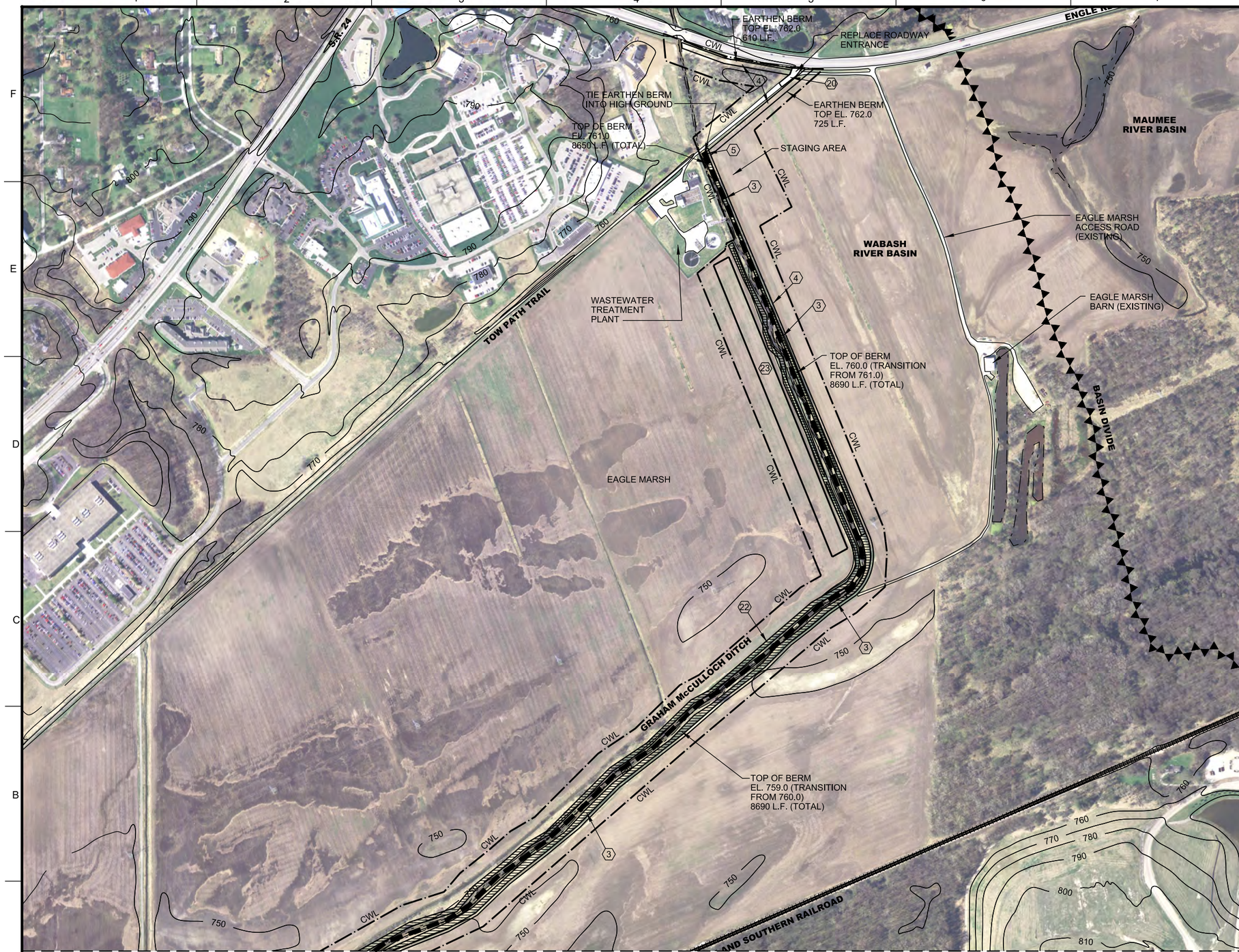

ALTERNATIVE I RECONSTRUCT LEFT DESCENDING GRAHAM McCULLOCH DITCH BERM,
DEMOLISH RIGHT DESCENDING BERM AND CONSTRUCT MULTI-CELL WETLAND AREA - SITE PLAN

A1

1"=300'

N

0 300' 600'

GENERAL SHEET NOTES

1. THE PROPOSED GRAHAM McCULLOCH BERM IS TO BE LOCATED APPROX. ON ITS EXISTING ALIGNMENT AS SHOWN ON THE PLANS.
2. THE GRAHAM McCULLOCH DITCH TOP OF BERM HEIGHT DECREASES FROM EL. 761.0 (UPSTREAM) TO EL. 759.0 (DOWNSTREAM).

SHEET KEYNOTES

1 I-WALL, SEE DETAIL, SH. CZ001
2 FENCE , SEE DETAIL, SH. CZ002 & CZ003
3 DEMOLISH LEFT DESCENDING GRAHAM McCULLOCH DITCH BERM
4 EARTHEN BERM, SEE DETAIL, SH. CZ001
5 INDIANA REVETMENT RIPRAP
6 PUMP STATION (30' X 25'), SEE DETAILS, SH. CZ005
7 TERRESTRIAL ANIMAL CROSSING, SEE DETAIL SH. CZ001
8 GATEWELL/SLUICE GATE
9 PERMEABLE BERM, SEE DETAIL, SH. CZ001
10 DEBRIS FENCE, SEE DETAIL, SH. CZ003
11 FENCE / EARTHEN BERM, SEE DETAIL, SH. CZ001
12 METAL GATE, 15' WIDTH, SEE DETAIL, SH. CZ001
13 EQUIPMENT GATE STRUCTURE, SEE DETAIL SH. CZ002
14 FLAP GATE, SEE DETAIL, SH. CZ007
15 48" CMP
16 CONCRETE HEADWALL, SEE DETAIL, SH. CZ007
17 TRAPEZOIDAL DITCH, SEE DETAIL, SH. CZ001
18 TELEMETRY CONTROL STRUCTURE
19 HEAVY DUTY DEBRIS BOOM
20 ACCESS ROAD , SEE DETAIL, SH. CZ006
21 CONCRETE PIER AND BAR SCREEN BARRIER, SEE DETAIL, SH. CZ004
22 DEMOLISH RIGHT DESCENDING GRAHAM McCULLOCH DITCH BERM
23 MULTI-CELL WETLAND AREA (1800' x 100')
24 VERTICAL DROP STRUCTURE, SEE DETAIL SH. CZ006
25 VEGETATION FILTER STRIP (NATIVE TREES AND SHRUBS)
26 OUTLET PIPES, SEE DETAIL CZ006
27 RELOCATE EAGLE MARSH ACCESS ROAD, SEE DETAIL, SH. CZ006
28 DISCHARGE WELL (52' x 15')
29 PUMP STATION SUMP (101' x 47'), SEE DETAIL, SH. CZ005
30 SILT FENCE, SEE DETAIL, SH. CZ001

LEGEND

I-WALL
BASIN DIVIDE
FENCE
DEBRIS BOOM
EARTHEN BERM
FENCE/EARTHEN BERM
INDIANA REVETMENT RIPRAP
CWL — CONTRACTOR WORK LIMITS
DEMOLISH STRUCTURE
PT — POWER & TELEPHONE UTILITY LINES
P — ELECTRIC UTILITY LINES

US ARMY CORPS OF ENGINEERS
LOUISVILLE DISTRICT

SYMBOL	REVISIONS DESCRIPTION	DATE	APPR.

DESIGNED BY: B. JENNINGS
DRAWN BY: C. ROBINSON
CHECKED BY: B. DORSCH
B. JENNINGS, P.E.
PROJECT ENGINEER/ARCHITECT

DATE: FEBRUARY 2012
SCALE: AS SHOWN
DRAWING CODE: LR 5,6-12,1
DATE

AQUATIC NUISANCE SPECIES
CONTROL PILOT PROJECT
WABASH-MAUMEE BASIN
FORT WAYNE, INDIANA

ALTERNATIVE I
SITE PLAN
(SH. 1 OF 2)

SHEET REFERENCE NUMBER:
CS113
SHEET 16 OF 38

FINAL SUBMITTAL

FILE: \\lrl-fs01lou\Org\ED\Public\CAD\Civil\114597\CADD\114597CS113.DGN
DATE: 30-MAY-2012 11:59

ALTERNATIVE I RECONSTRUCT LEFT DESCENDING GRAHAM McCULLOCH DITCH BERM,
DEMOLISH RIGHT DESCENDING BERM AND CONSTRUCT VEGETATION FILTER STRIP - SITE PLAN

A1

1"=300'

N

0 300' 600'

GENERAL SHEET NOTES

1. THE PROPOSED GRAHAM McCULLOCH BERM IS TO BE LOCATED APPROX. ON ITS EXISTING ALIGNMENT AS SHOWN ON THE PLANS.
2. THE GRAHAM McCULLOCH DITCH TOP OF BERM HEIGHT DECREASES FROM 761.0 EL. (UPSTREAM) TO EL. 759.0 (DOWNSTREAM).

SHEET KEYNOTES

1 I-WALL, SEE DETAIL, SH. CZ001
2 FENCE , SEE DETAIL, SH. CZ002 & CZ003
3 DEMOLISH LEFT DESCENDING GRAHAM McCULLOCH DITCH BERM
4 EARTHEN BERM, SEE DETAIL, SH. CZ001
5 INDIANA REVETMENT RIPRAP
6 PUMP STATION (30' X 25'), SEE DETAILS, SH. CZ005
7 TERRESTRIAL ANIMAL CROSSING, SEE DETAIL SH. CZ001
8 GATEWELL/SLUICE GATE
9 PERMEABLE BERM, SEE DETAIL, SH. CZ001
10 DEBRIS FENCE, SEE DETAIL, SH. CZ003
11 FENCE / EARTHEN BERM, SEE DETAIL, SH. CZ001
12 METAL GATE, 15' WIDTH, SEE DETAIL, SH. CZ001
13 EQUIPMENT GATE STRUCTURE, SEE DETAIL SH. CZ002
14 FLAP GATE, SEE DETAIL, SH. CZ007
15 48" CMP
16 CONCRETE HEADWALL, SEE DETAIL, SH. CZ007
17 TRAPEZOIDAL DITCH, SEE DETAIL, SH. CZ001
18 TELEMETRY CONTROL STRUCTURE
19 HEAVY DUTY DEBRIS BOOM
20 ACCESS ROAD , SEE DETAIL, SH. CZ006
21 CONCRETE PIER AND BAR SCREEN BARRIER, SEE DETAIL, SH. CZ004
22 DEMOLISH RIGHT DESCENDING GRAHAM McCULLOCH DITCH BERM
23 MULTI-CELL WETLAND AREA (1800' x 100')
24 VERTICAL DROP STRUCTURE, SEE DETAIL SH. CZ006
25 VEGETATION FILTER STRIP (NATIVE TREES AND SHRUBS)
26 OUTLET PIPES, SEE DETAIL CZ006
27 RELOCATE EAGLE MARSH ACCESS ROAD, SEE DETAIL, SH. CZ006
28 DISCHARGE WELL (52' x 15')
29 PUMP STATION SUMP (101' x 47'), SEE DETAIL, SH. CZ005
30 SILT FENCE, SEE DETAIL, SH. CZ001

LEGEND

I-WALL
BASIN DIVIDE
FENCE
DEBRIS BOOM
EARTHEN BERM
FENCE/EARTHEN BERM
INDIANA REVETMENT RIPRAP
CWL — CONTRACTOR WORK LIMITS
DEMOLISH STRUCTURE
PT — POWER & TELEPHONE UTILITY LINES
P — ELECTRIC UTILITY LINES

US ARMY CORPS OF ENGINEERS
LOUISVILLE DISTRICT

REVISIONS			
SYMBOL	DESCRIPTION	DATE	APPR.

DESIGNED BY: B. JENNINGS
DATE: FEBRUARY 2012
DRAWN BY: C. ROBINSON
SCALE: AS SHOWN
CHECKED BY: B. DORSCH
DRAWING CODE: LR 5,6-12,1
B. JENNINGS, P.E.
PROJECT ENGINEER/ARCHITECT
DATE

AQUATIC NUISANCE SPECIES
CONTROL FEASIBILITY
WABASH-MAUMEE BASIN
FORT WAYNE, INDIANA

ALTERNATIVE I
SITE PLAN
(SH. 2 OF 2)

SHEET REFERENCE NUMBER:
CS114
SHEET 17 OF 38

FINAL SUBMITTAL

FILE: \\lrl-fs01lou\Org\ED\Public\CAD\Civil\114597\CADD\114597CS114.DGN
DATE: 30-MAY-2012 11:59

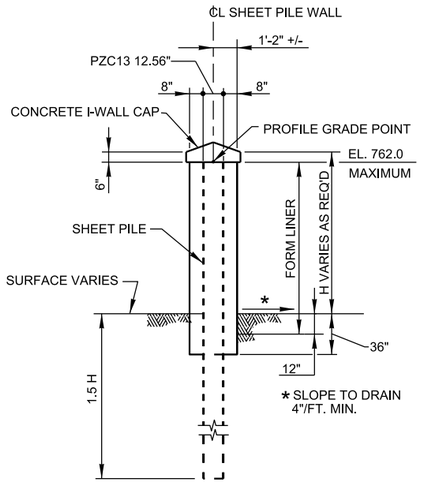

NOTE: REBAR NOT SHOWN FOR CLARITY.

1 I-WALL
CS101 CZ001 NTS

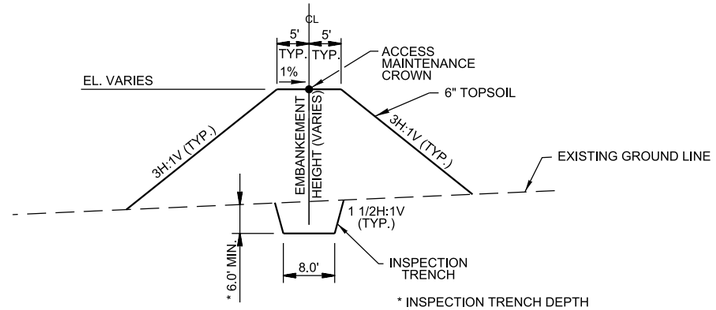

* INSPECTION TRENCH DEPTH SHALL BE 6' MINIMUM UNLESS THE EMBANKMENT HEIGHT IS LESS THAN 6', IN WHICH CASE THE MINIMUM DEPTH SHALL BE 4'.

NOTE:
COMPACT TO 95% ASTM D 698

2 EARTHEN BERM
CS101 CZ001 NTS
CS102
CS103
CS104
CS107
CS111
CS112
CS113
CS114

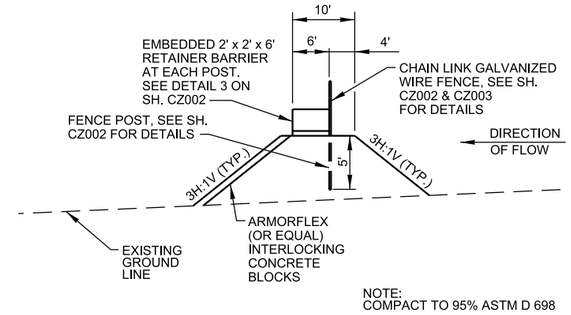

NOTE:
COMPACT TO 95% ASTM D 698

3 FENCE / EARTHEN BERM
CS107 CZ001 NTS

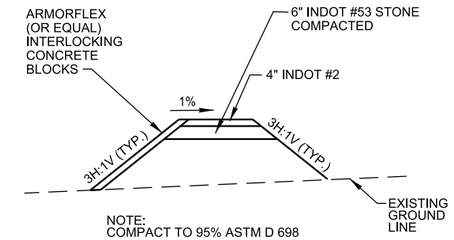

NOTE:
COMPACT TO 95% ASTM D 698

8 EARTHEN BERM/ACCESS ROAD
CS107 CZ001 NTS

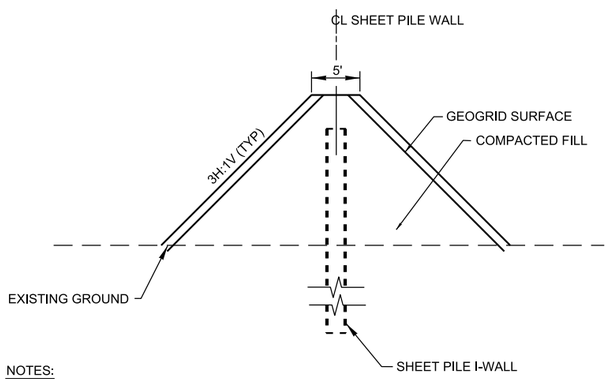

NOTES:

1. CROSSING SHALL BE 15' WIDE LONGITUDINALLY ALONG I-WALL AT CREST.
2. I-WALL CAP, FORM LINER & CONCRETE FACING NOT CONSTRUCTED WHERE HIDDEN BY FILL MATERIAL (15' WIDTH) AT ANIMAL CROSSING AREAS.

4 TERRESTRIAL ANIMAL CROSSING
CS101 CZ001 NTS
CS107

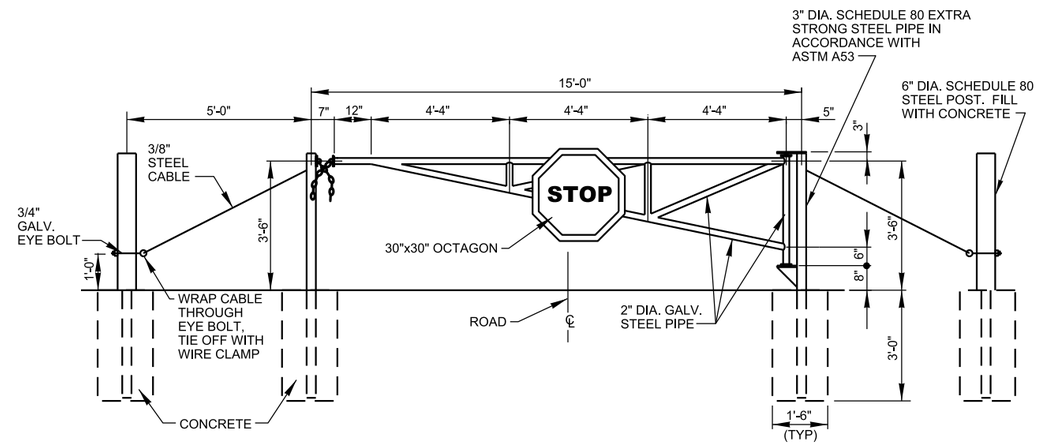

5 METAL GATE
CS107 CZ001 NTS

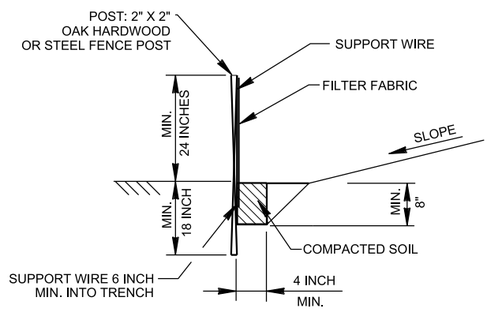

9 SILT FENCE
CS106 CZ001 NTS

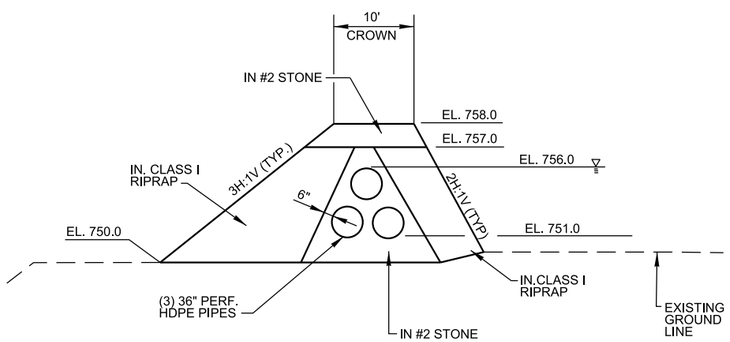

6 PERMEABLE BERM
CS105 CZ001 NTS
CS106
CS109
CS110

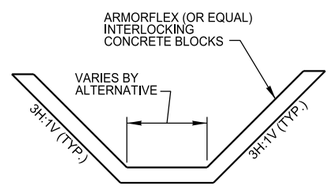

7 TRAPEZOIDAL DITCH
CS103 CZ001 NTS
CS104
CS105
CS106
CS109
CS110

A1 MISCELLANEOUS DETAILS

NTS

CS107

US ARMY CORPS OF ENGINEERS
LOUISVILLE DISTRICT

SYMBOL	DESCRIPTION	DATE	APPR.
	REVISIONS		

DESIGNED BY: B. JENNINGS
DRAWN BY: C. ROBINSON
CHECKED BY: B. DORSCH
B. JENNINGS, P.E.
PROJECT ENGINEER/ARCHITECT

DATE: FEBRUARY 2012
SCALE: NONE
DRAWING CODE: LR 5,6-12,1
DATE

AQUATIC NUISANCE SPECIES
CONTROL REPORT
WABASH-MAUMEE BASIN
FORT WAYNE, INDIANA

MISCELLANEOUS DETAILS

SHEET REFERENCE NUMBER:
CZ001
SHEET 18 OF 38

FINAL SUBMITTAL

FILE: \\lrl-fs01lou\Org\ED\Public\CAD\Civil\114597\CADD\114597CZ001.dgn
DATE: 30-MAY-2012 12:00

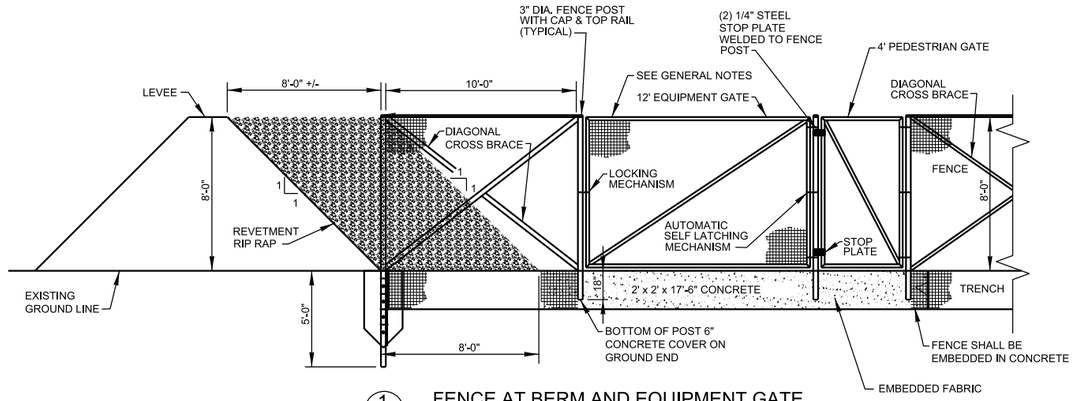

1 FENCE AT BERM AND EQUIPMENT GATE
CS102 CS107 | CZ002 NTS

GENERAL NOTES:

ALL GAPS BETWEEN GATES, FENCE POSTS, CONCRETE AND STEEL CHANNEL SHALL BE 1 1/2" OR LESS.

ALL FENCE TOPS AT MIN. ELEV. OF 760.0.

ALL GATES OPEN WITH SWING TO UPSTREAM (MAUMEE RIVER) SIDE OF FENCE (N.E. SIDE OF FENCE)

MAXIMUM SWING OPENING ON PEDESTRIAN GATES TO BE 60".

PEDESTRIAN GATE CLOSER TO BE AUTOMATIC SPRING LOADED.

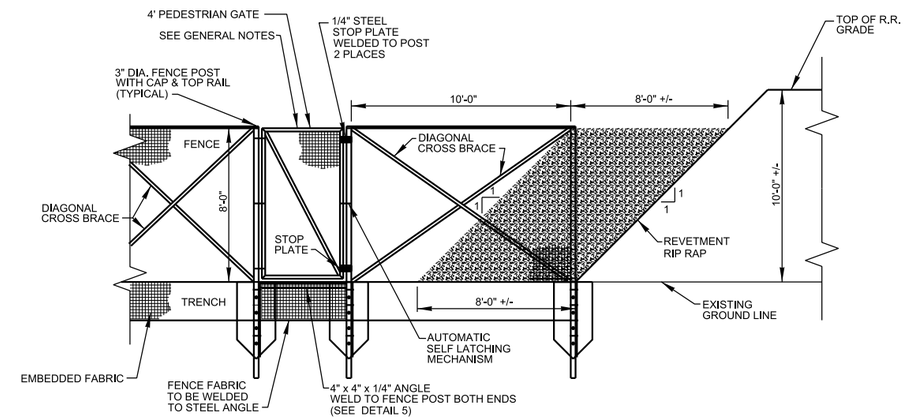

2 FENCE AT RAILROAD
CS102 CS107 | CZ002 NTS

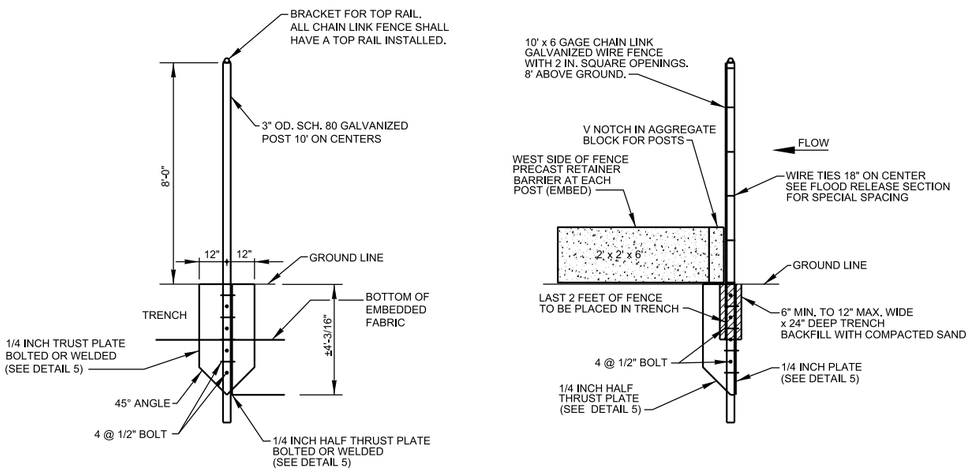

3 FENCE POST
CS102 CS107 | CZ002 NTS

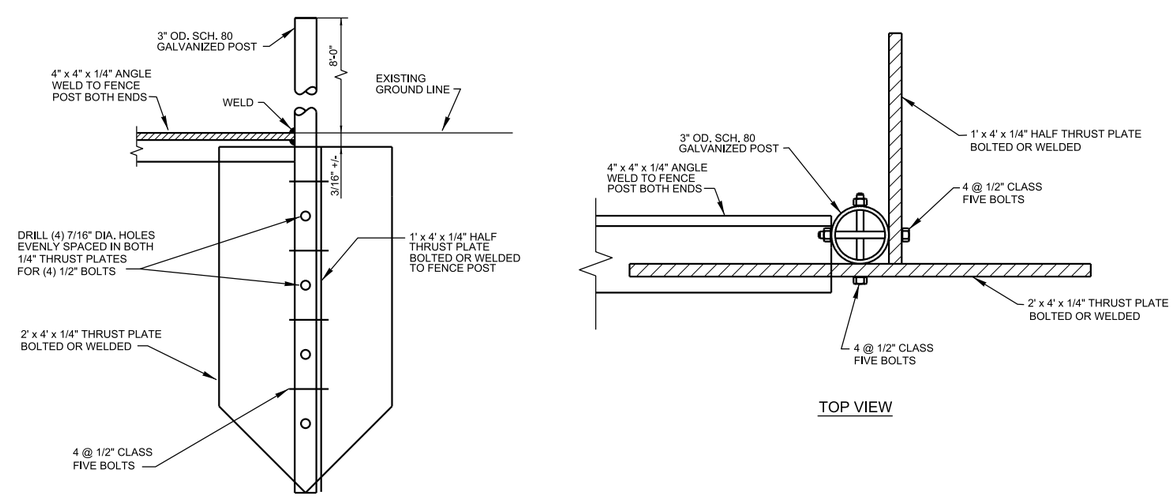

5 1/4" THRUST PLATES
CS102 CS107 | CZ002 NTS

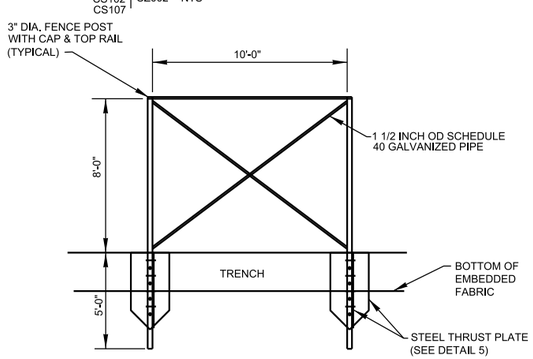

4 END PANEL POSTS
CS102 CS107 | CZ002 NTS

A1 FENCE DETAILS
NTS

US ARMY CORPS OF ENGINEERS
LOUISVILLE DISTRICT

SYMBOL	DESCRIPTION	DATE	APPR.
	REVISIONS		

DESIGNED BY: B. JENNINGS
DRAWN BY: C. ROBINSON
CHECKED BY: B. DORSCH
B. JENNINGS, P.E.
PROJECT ENGINEER/ARCHITECT

DATE: FEBRUARY 2012
SCALE: NONE
DRAWING CODE: LR 5,6-12,1
DATE

AQUATIC NUISANCE SPECIES CONTROL RESEARCH
WABASH-MAUMEE BASIN
FORT WAYNE, INDIANA

FENCE DETAILS

SHEET REFERENCE NUMBER:
CZ002
SHEET 19 OF 38

FINAL SUBMITTAL

FILE: \\lrl-fs01lou\Org\ED\Public\CAD\Civil\114597\CADD\114597CZ002.dgn
DATE: 30-MAY-2012 12:00

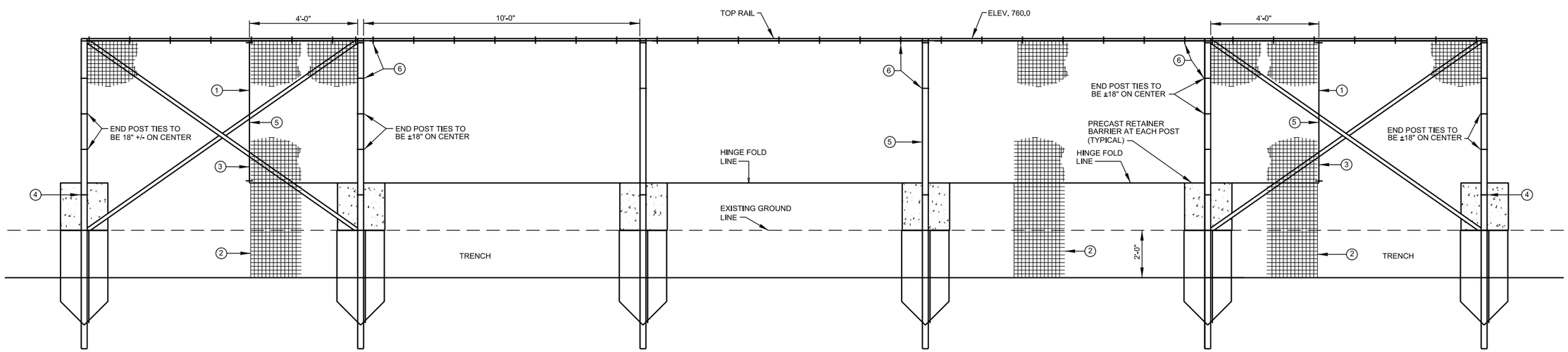

1 FLOOD RELEASE PANEL
CS102 CZ003 CS107
NTS

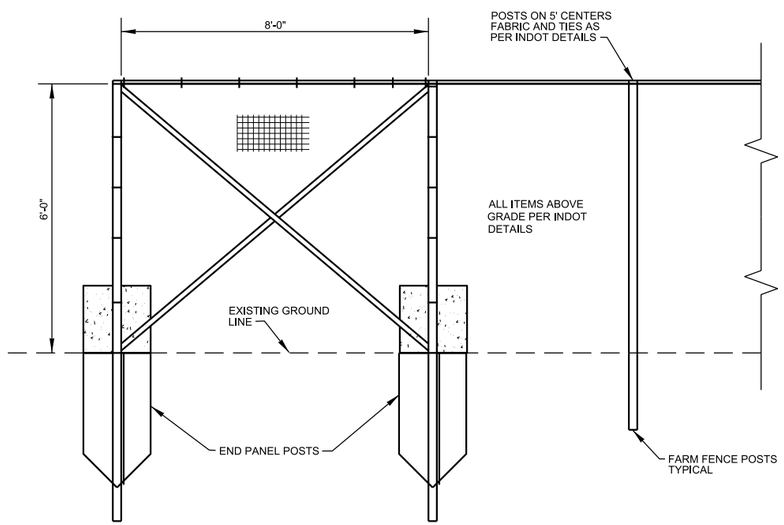

2 DEBRIS FENCE
CS102 CZ003 CS107
NTS

NOTES

1. PLACE RELEASE PANEL ON DOWN STREAM SIDE OF POSTS.
2. PLACE FENCE PANELS FULLY INTO TRENCH AND BACKFILL.
3. TIE FENCE FABRIC TO METAL BAR AND THEN TIE TO END PANEL FABRIC.
4. TIE FENCE FABRIC NO HIGHER THAN 18" ABOVE GROUND.
5. NO TIES TO POST IN THE AREA BETWEEN 18" ABOVE GRADE UP TO LEVEL 758.0.
6. FOR FLOOD RELEASE PANEL ALL TIES ON TOP RAIL AND VERTICAL POSTS SHALL BE 758.0 OR ABOVE.

A1 FENCE DETAILS
NTS

US ARMY CORPS OF ENGINEERS
LOUISVILLE DISTRICT

SYMBOL	DESCRIPTION	DATE	APPR.
	REVISIONS		

DESIGNED BY: B. JENNINGS
DRAWN BY: C. ROBINSON
CHECKED BY: B. DORSCH
B. JENNINGS, P.E.
PROJECT ENGINEER/ARCHITECT

DATE: FEBRUARY 2012
SCALE: NONE
DRAWING CODE: LR 5.6-12.1
DATE

AQUATIC NUISANCE SPECIES CONTROL REPORT
WABASH-MAUMEE BASIN
FORT WAYNE, INDIANA

FENCE DETAILS

SHEET REFERENCE NUMBER:
CZ003
SHEET 20 OF 38

FINAL SUBMITTAL

FILE: \\lrl-fs01lou\Org\ED\Public\CAD\Civil\114597\CADD\114597CZ003.dgn
DATE: 30-MAY-2012 12:00

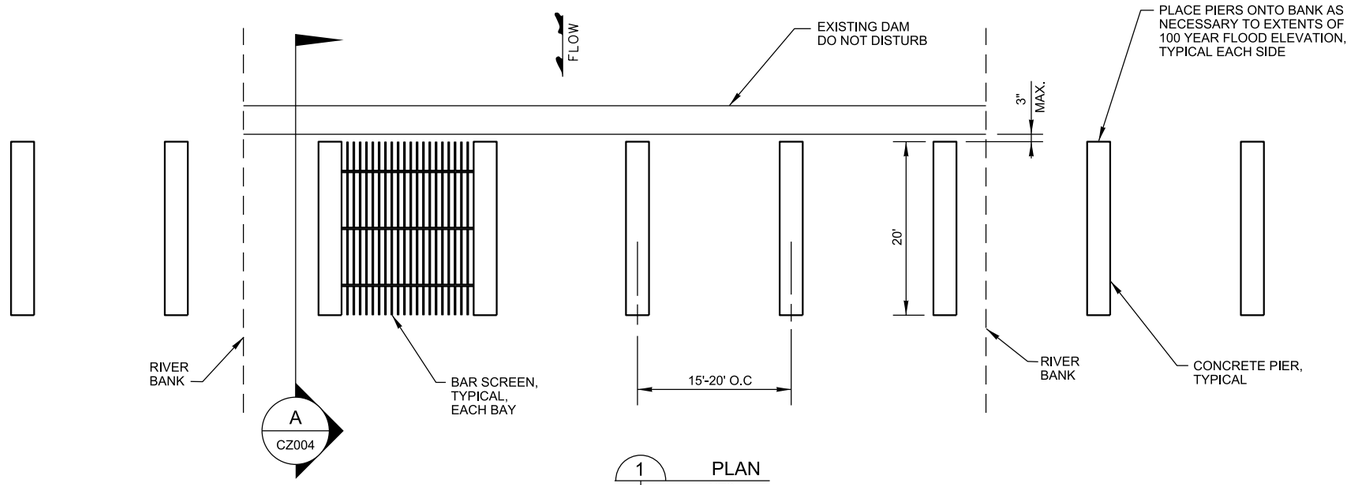

1 PLAN
CS108 CZ004
NTS

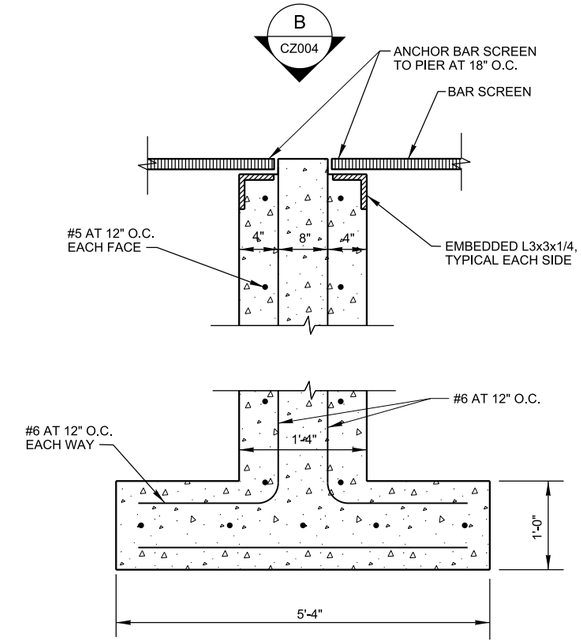

C CZ004 PIER SECTION
NTS

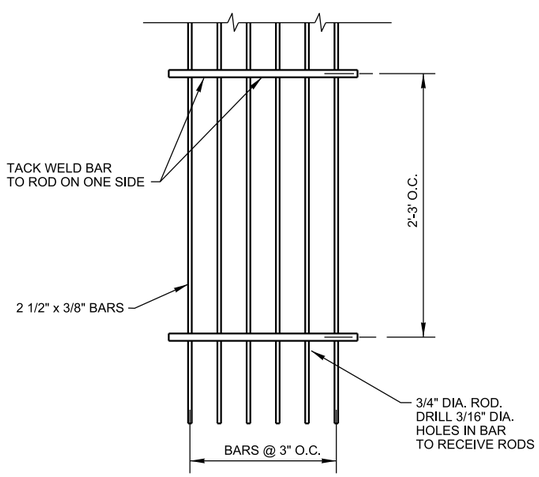

2 BAR SCREEN DETAIL
CS108 CZ004
NTS

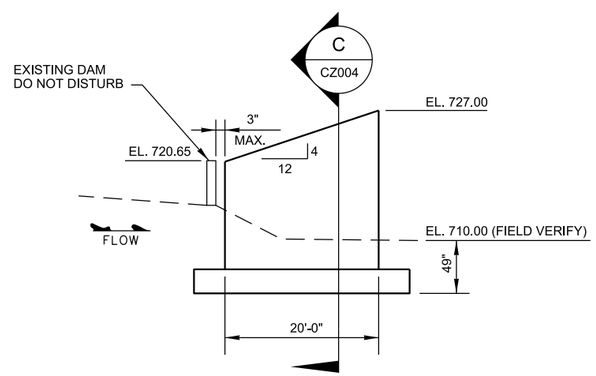

A CZ004 PIER ELEVATION
NTS

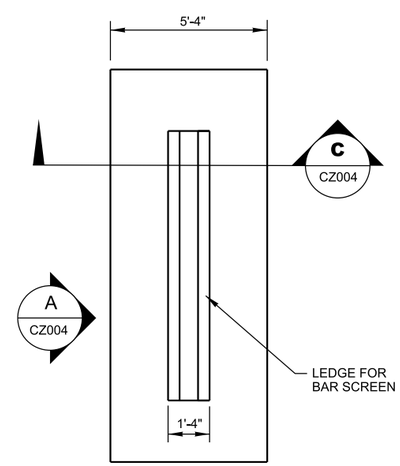

B CZ004 PIER PLAN
NTS

A1 CONCRETE PIER AND BAR SCREEN BARRIER DETAILS
NTS

US ARMY CORPS OF ENGINEERS
LOUISVILLE DISTRICT

SYMBOL	REVISIONS DESCRIPTION	DATE	APPR.

DESIGNED BY: N. CASH
DRAWN BY: C. ROBINSON
CHECKED BY: B. TUCKER
B. JENNINGS, P.E.
PROJECT ENGINEER/ARCHITECT

DATE: FEBRUARY 2012
SCALE: NONE
DRAWING CODE: LR 5,6-12,1
DATE

AQUATIC NUISANCE SPECIES CONTROL PROJECT
WABASH-MAUMEE BASIN
FORT WAYNE, INDIANA

CONCRETE PIER AND BAR SCREEN BARRIER DETAIL

SHEET REFERENCE NUMBER:
CZ004
SHEET 21 OF 38

FINAL SUBMITTAL

FILE: \\lrl-fs01lou\Org\ED\Public\CAD\Civil\114597\CADD\114597CZ004.dgn
DATE: 30-MAY-2012 12:00

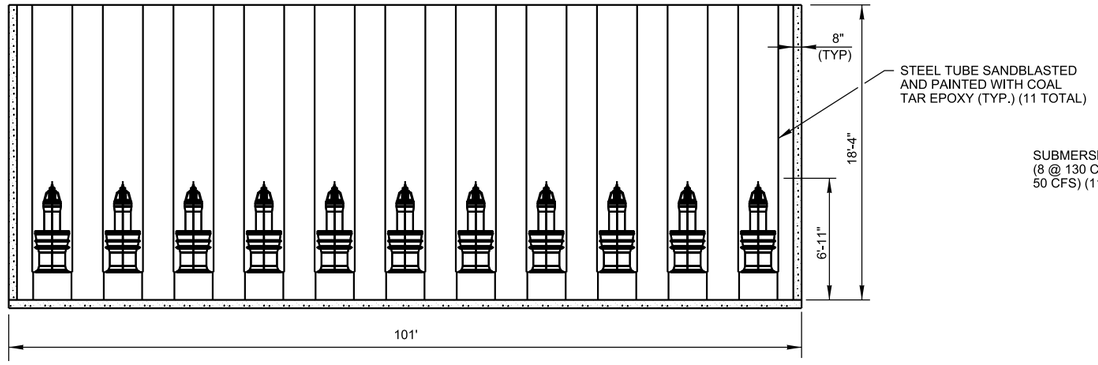

1 PROFILE VIEW
CS103 CS104 | CZ005
NTS

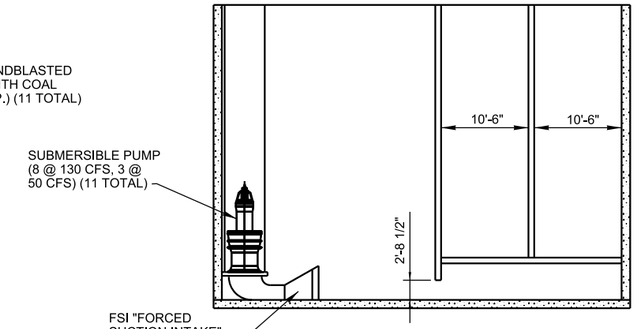

2 SIDE VIEW
CS103 CS104 | CZ005
NTS

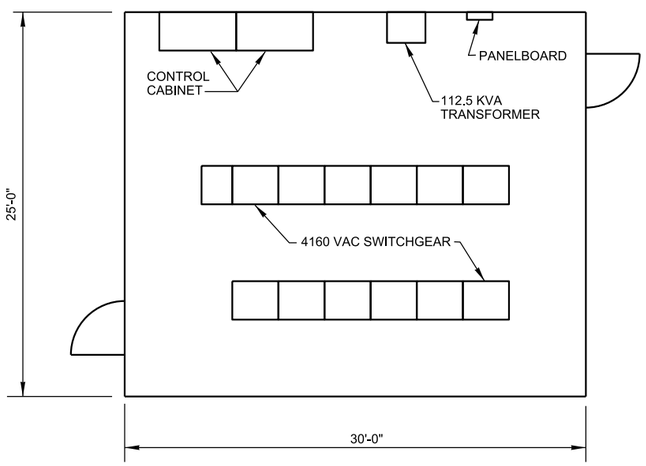

3 PLAN VIEW
CS103 CS104 | CZ005
NTS

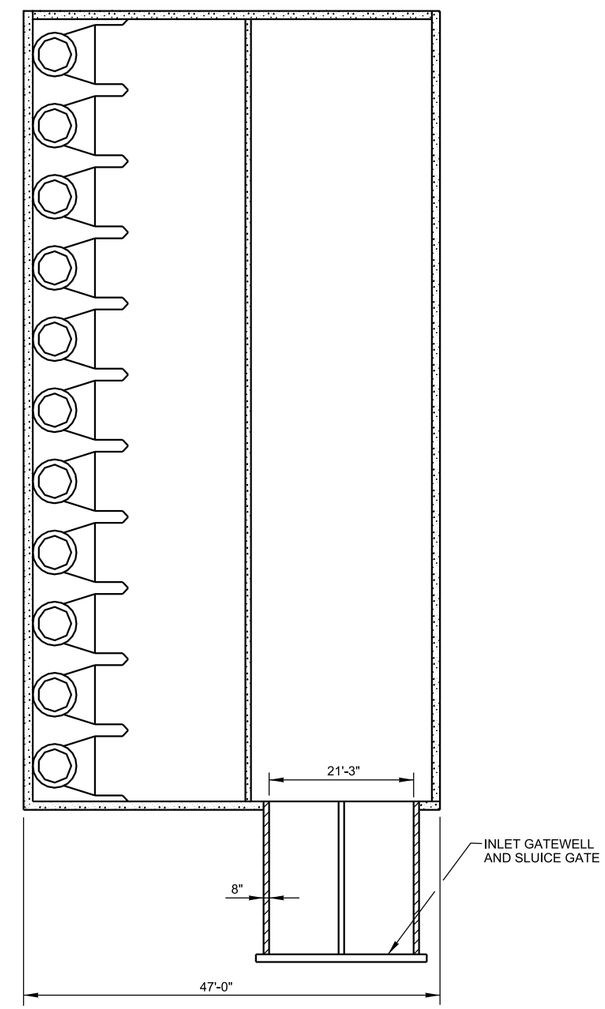

4 PLAN VIEW
CS103 CS104 | CZ005
NTS

NOTE:
DISCHARGE PIPES WILL BE
48" (8 TOTAL) & 30" (3 TOTAL)

A1 PUMP STATION DETAILS
NTS

US ARMY CORPS
OF ENGINEERS
LOUISVILLE DISTRICT

SYMBOL	REVISIONS DESCRIPTION	DATE	APPR.

DESIGNED BY: B. SMITH
DATE: FEBRUARY 2012
DRAWN BY: C. ROBINSON
SCALE: NONE
CHECKED BY: M. ROBERTSON
DRAWING CODE: LR 5,6-12,1
B. JENNINGS, P.E.
PROJECT ENGINEER/ARCHITECT
DATE

AQUATIC NUISANCE SPECIES
CONTROL FEASIBILITY
WABASH-MAUMEE BASIN
FORT WAYNE, INDIANA

PUMP STATION
DETAILS

SHEET
REFERENCE
NUMBER:
CZ005
SHEET 22 OF 38

FINAL SUBMITTAL

FILE: \\lrl-fs01lou\Org\ED\Public\CAD\Civil\114597\CADD\114597CZ005.dgn
DATE: 30-MAY-2012 12:00

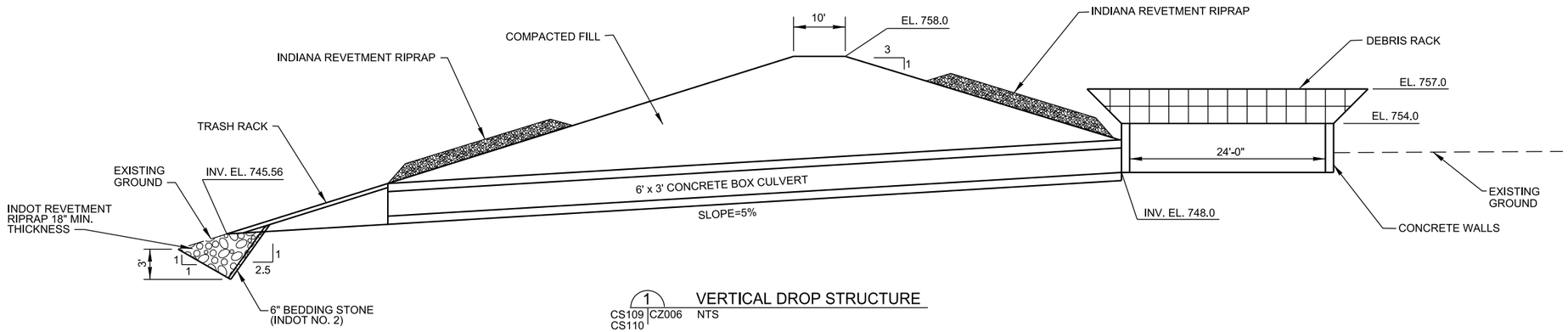

1 VERTICAL DROP STRUCTURE
CS109 CZ006 NTS
CS110

* 20' WIDTH ON TOW PATH TRAIL

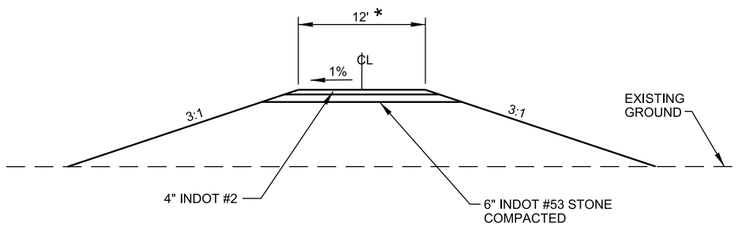

2 ACCESS ROAD
CS101 CZ006 NTS
CS102
CS103
CS104
CS105
CS106
CS107
CS108
CS109
CS110
CS111
CS113

A1 VERTICAL DROP STRUCTURE DETAILS
NTS

US ARMY CORPS OF ENGINEERS
LOUISVILLE DISTRICT

SYMBOL	REVISIONS DESCRIPTION	DATE	APPR.

DESIGNED BY: B. JENNINGS
DRAWN BY: C. ROBINSON
CHECKED BY: B. DORSCH
B. JENNINGS, P.E.
PROJECT ENGINEER/ARCHITECT
DATE
DATE: FEBRUARY 2012
SCALE: NONE
DRAWING CODE: LR 5,6-12,1

AQUATIC NUISANCE SPECIES CONTROL REPORT
WABASH-MAUMEE BASIN
FORT WAYNE, INDIANA

VERTICAL DROP STRUCTURE DETAILS

SHEET REFERENCE NUMBER:
CZ006
SHEET 23 OF 38

FINAL SUBMITTAL

FILE: \\lrl-fs01lou\Org\ED\Public\CAD\Civil\114597\CADD\114597CZ006.dgn
DATE: 30-MAY-2012 12:00

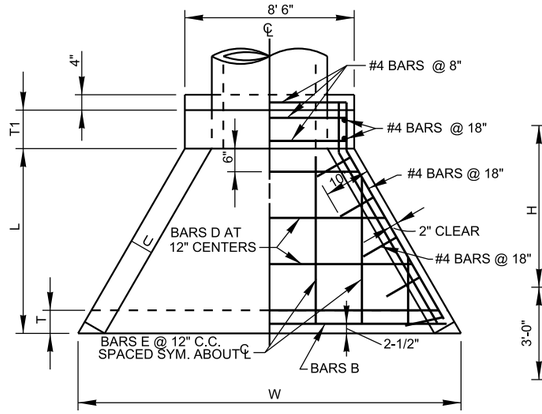

PLAN

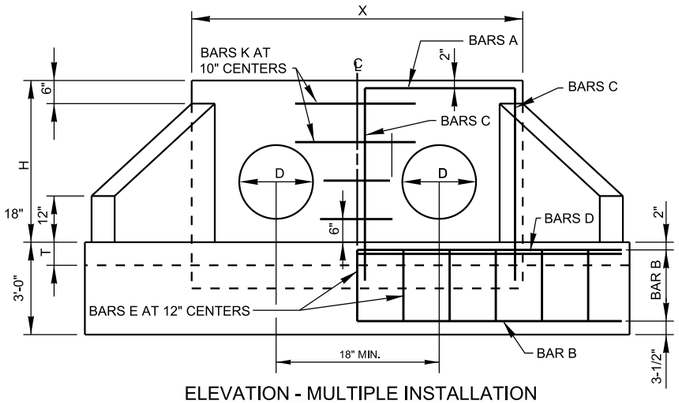

ELEVATION - MULTIPLE INSTALLATION

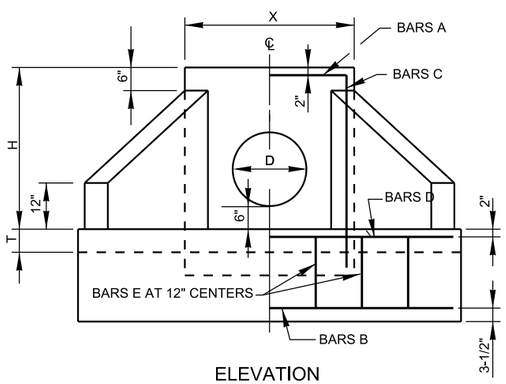

ELEVATION

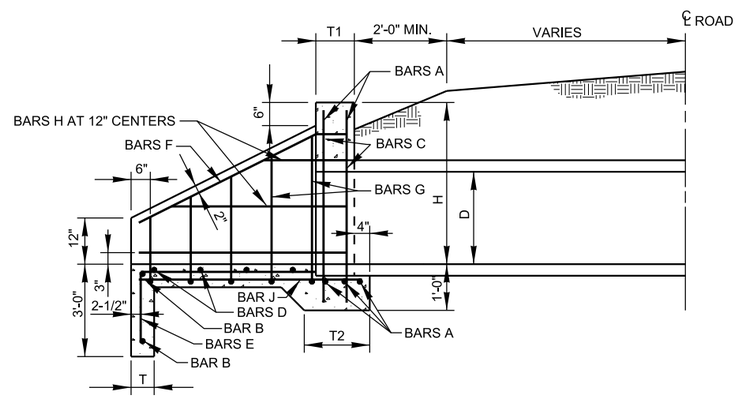

SECTION ON PIPE CL

1 CS110 CZ007 PIPE CULVERT AND PUMP DISCHARGE HEADWALL DETAILS

NTS

NOTES:

1. REINFORCING STEEL FY = 60 KSI.
2. ALL BARS AND L'S SHALL BE STRUCTURAL GRADE STEEL.
3. ANCHOR BOLTS SHALL BE STAINLESS STEEL EPOXY COATED OR APPROVED EQUAL.

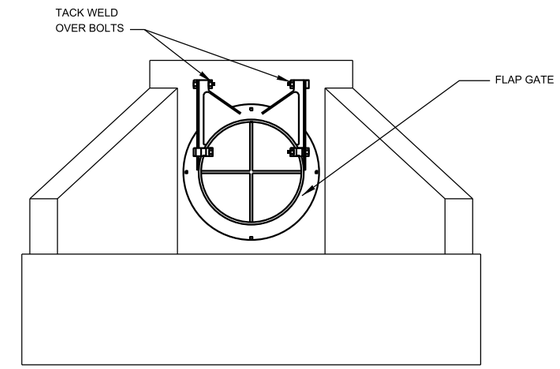

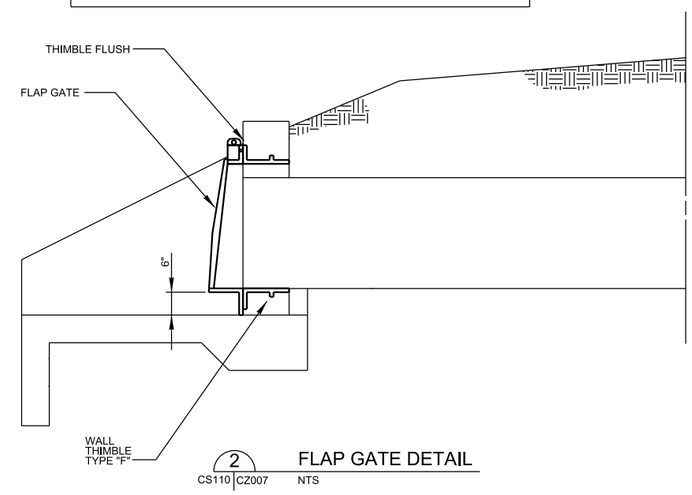

2 CS110 CZ007 FLAP GATE DETAIL

NTS

NOTES:

1. FLAP GATES SHALL HAVE POSITIVE STOPS OR BUMPERS TO PREVENT THE FLAP FROM OVER OPENING, SO FLAP GATE CAN CLOSE BY WAY OF GRAVITY ALONE.

TABLE OF VARIABLE DIMENSIONS

PIPE SIZE D	NUMBER OF PIPE*	H	L	W	X	T	T1	T2	U	BARS A NO.	BARS A SIZE	BARS B NO.	BARS B SIZE	BARS C NO.	BARS C SIZE	BARS D NO.	BARS D SIZE	BARS E NO.	BARS E SIZE	BARS F NO.	BARS F SIZE	BARS G NO.	BARS G SIZE	BARS G SPACING NORMAL TO CURB	BARS H NO.	BARS H SIZE	BARS J NO.	BARS J SIZE	BARS K NO.	BARS K SIZE
30"	1	4'-0"	5'-0"	9'-11 1/4"	4'-2"	6"	10"	1'-5"	6"	5	4	2	4	4	4	5	4	10	4	4	4	12	4	12"	6	4	2	4	-	-
30"	2	4'-0"	5'-0"	14'-3 3/4"	8'-6 1/2"	6"	10"	1'-5"	6"	5	4	2	4	8	4	5	4	13	4	4	4	12	4	12"	6	4	2	4	4	4
36"	1	4'-6"	6'-0"	11'-7 1/8"	4'-8"	6"	12"	1'-7"	6"	5	4	2	4	4	4	6	4	11	4	4	4	14	4	12"	8	4	2	4	-	-
36"	2	4'-6"	6'-0"	16'-10 1/8"	9'-11"	6"	12"	1'-7"	6"	5	4	2	4	8	4	6	4	16	4	4	4	14	4	12"	8	4	2	4	4	4
48"	1	5'-6"	8'-0"	15'- 7/8"	5'-10"	6"	12"	1'-7"	6"	5	4	2	4	4	4	8	4	14	4	4	4	20	4	2@8", 4@10", 4@12"	10	4	2	4	-	-
48"	2	5'-6"	8'-0"	22'- 7/8"	12'-10"	6"	12"	1'-7"	6"	5	4	2	4	10	4	8	4	21	4	4	4	20	4	2@8", 4@10", 4@12"	10	4	2	4	6	4

* FOR MULTIPLE INSTALLATIONS HAVING MORE THAN TWO PIPES THE DIMENSION "X" IS TO BE INCREASED BY THE VALUE D + 30/4 FOR EACH ADDITIONAL PIPE. ADDITIONAL BARS C & E ARE TO BE PROVIDED AND SPACED AS SHOWN.

A1 PIPE CULVERT HEADWALL DETAILS

NTS

US ARMY CORPS OF ENGINEERS
LOUISVILLE DISTRICT

SYMBOL	REVISIONS DESCRIPTION	DATE	APPR.

DESIGNED BY: B. JENNINGS
DATE: FEBRUARY 2012
DRAWN BY: C. ROBINSON
SCALE: NONE
CHECKED BY: B. DORSCH
DRAWING CODE: LR 5,6-12,1
B. JENNINGS, P.E.
PROJECT ENGINEER/ARCHITECT
DATE

AQUATIC NUISANCE SPECIES CONTROL RESEARCH
WABASH-MAUMEE BASIN
FORT WAYNE, INDIANA

PIPE CULVERT HEADWALL DETAILS

SHEET REFERENCE NUMBER:
CZ007
SHEET 24 OF 38

FINAL SUBMITTAL

FILE: \\lrl-fs01\ou\Org\ED\Public\CAD\Civil\114597\CADD\114597CZ007.DGN
DATE: 30-MAY-2012 12:00

GENERAL SHEET NOTES

1. FOR REFERENCE ONLY.

RWLVE = 6.53 ACRES
RWTWE = 21.26 ACRES

SHEET KEYNOTES

LEGEND

RWTWE — TEMPORARY WORK EASEMENT

RWLVE — LEVEE RIGHT OF WAY

A1 ALTERNATIVE A CONSTRUCT I-WALL RIGHT OF WAY PLAN

1"=300'

0 300' 600'

US ARMY CORPS OF ENGINEERS
LOUISVILLE DISTRICT

SYMBOL	REVISIONS DESCRIPTION	DATE	APPR.

DESIGNED BY: B. JENNINGS
DATE: FEBRUARY 2012
DRAWN BY: C. ROBINSON
SCALE: AS SHOWN
CHECKED BY: B. DORSCH
DRAWING CODE: LR 5,6-12,1
B. JENNINGS, P.E.
PROJECT ENGINEER/ARCHITECT
DATE

AQUATIC NUISANCE SPECIES CONTROL PROJECT
WABASH-MAUMEE BASIN
FORT WAYNE, INDIANA

ALTERNATIVE A
RIGHT OF WAY PLAN

SHEET REFERENCE NUMBER:
RW101

SHEET 25 OF 38

FINAL SUBMITTAL

FILE: \\lrl-fs01lou\Org\ED\Public\CAD\Civil\114597\CADD\114597RW101.DGN
DATE: 30-MAY-2012 12:01

A1 ALTERNATIVE B CONSTRUCT FENCE AND RECONSTRUCT LEFT DESCENDING GRAHAM McCULLOCH BERM RIGHT OF WAY PLAN

1"=300'

GENERAL SHEET NOTES

1. FOR REFERENCE ONLY.

RWLVE = 12.76 ACRES
RWTWE = 26.64 ACRES

SHEET KEYNOTES

LEGEND

RWTWE — TEMPORARY WORK EASEMENT

RWLVE — LEVEE RIGHT OF WAY

US ARMY CORPS OF ENGINEERS
LOUISVILLE DISTRICT

SYMBOL	REVISIONS DESCRIPTION	DATE	APPR.

DESIGNED BY: B. JENNINGS
DRAWN BY: C. ROBINSON
CHECKED BY: B. DORSCH
B. JENNINGS, P.E.
PROJECT ENGINEER/ARCHITECT

DATE: FEBRUARY 2012
SCALE: AS SHOWN
DRAWING CODE: LR 5,6-12,1
DATE

AQUATIC NUISANCE SPECIES CONTROL PILOT PROJECT
WABASH-MAUMEE BASIN
FORT WAYNE, INDIANA

ALTERNATIVE B
RIGHT OF WAY PLAN

SHEET REFERENCE NUMBER:
RW102
SHEET 26 OF 38

FINAL SUBMITTAL

FILE: \\lrl-fs01lou\Org\ED\Public\CAD\Civil\114597\CADD\114597RW102.DGN
DATE: 30-MAY-2012 12:01

A1 ALTERNATIVE C CONSTRUCT EARTHEN BERM AND PUMP STATION RIGHT OF WAY PLAN

1"=300'

N

0 300' 600'

GENERAL SHEET NOTES

1. FOR REFERENCE ONLY.

SHEET KEYNOTES

LEGEND

RWTWE — TEMPORARY WORK EASEMENT

RWLVE — LEVEE RIGHT OF WAY

US ARMY CORPS OF ENGINEERS
LOUISVILLE DISTRICT

SYMBOL	REVISIONS DESCRIPTION	DATE	APPR.

DESIGNED BY: B. JENNINGS
DATE: FEBRUARY 2012
DRAWN BY: C. ROBINSON
SCALE: AS SHOWN
CHECKED BY: B. DORSCH
DRAWING CODE: LR 5,6-12,1
B. JENNINGS, P.E.
PROJECT ENGINEER/ARCHITECT
DATE

AQUATIC NUISANCE SPECIES
CONTROL PROJECT
WABASH-MAUMEE BASIN
FORT WAYNE, INDIANA

ALTERNATIVE C
RIGHT OF WAY PLAN

SHEET REFERENCE NUMBER:
RW103
SHEET 27 OF 38

FINAL SUBMITTAL

FILE: \\lrl-fs01lou\Org\ED\Public\CAD\Civil\114597\CADD\114597RW103.DGN
DATE: 30-MAY-2012 12:02

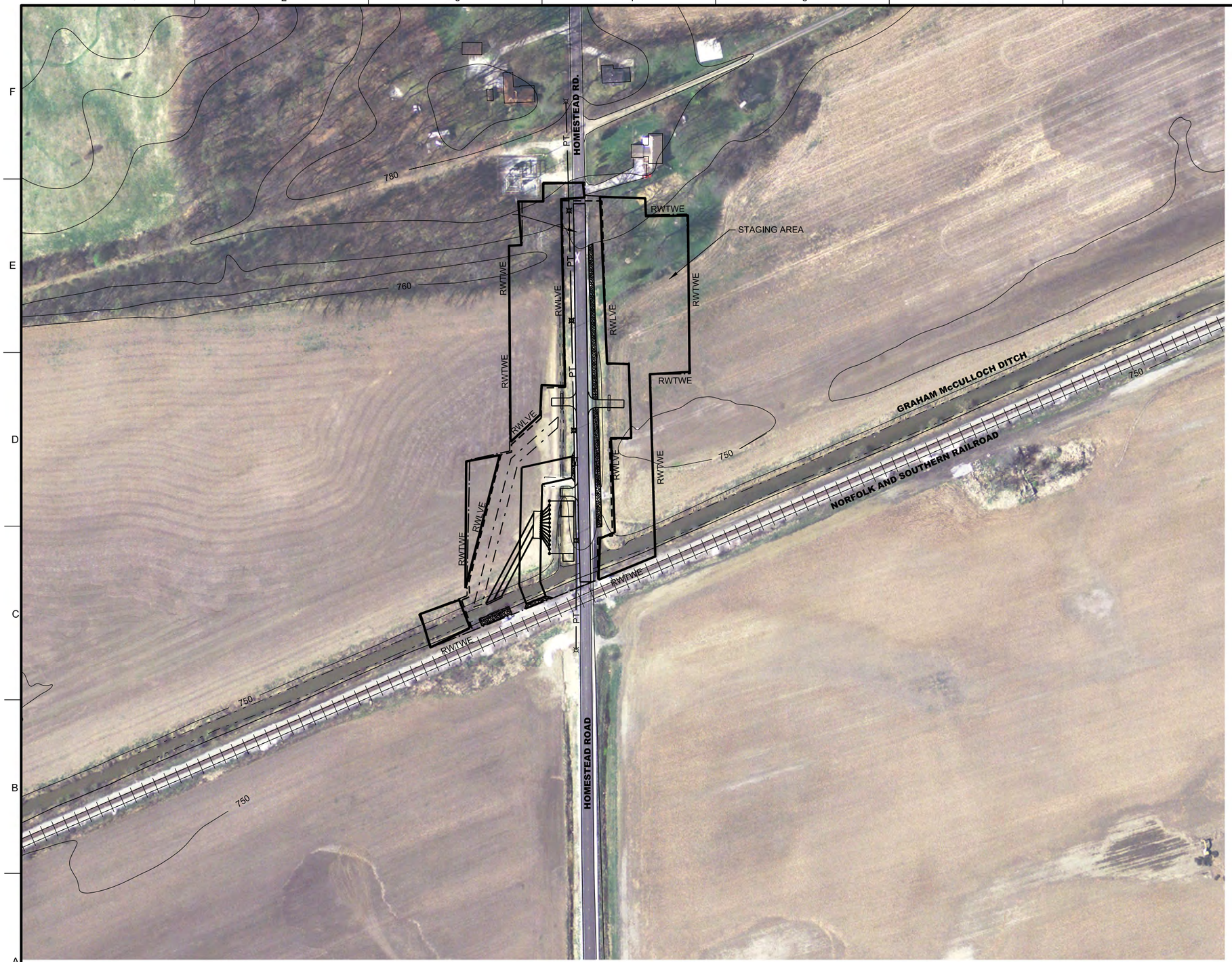

A1 ALTERNATIVE C CONSTRUCT EARTHEN BERM AND PUMP STATION ENLARGED RIGHT OF WAY PLAN

1"=100'

N

0 100' 200'

GENERAL SHEET NOTES

1. FOR REFERENCE ONLY.

   RWLVE = 2.8 ACRES
   RWTWE = 3.1 ACRES

SHEET KEYNOTES

LEGEND

RWTWE — TEMPORARY WORK EASEMENT

RWLVE — LEVEE RIGHT OF WAY

US ARMY CORPS OF ENGINEERS
LOUISVILLE DISTRICT

SYMBOL	DESCRIPTION	DATE	APPR.

REVISIONS

DESIGNED BY: B. JENNINGS
DRAWN BY: C. ROBINSON
CHECKED BY: B. DORSCH
B. JENNINGS, P.E.
PROJECT ENGINEER/ARCHITECT

DATE: FEBRUARY 2012
SCALE: AS SHOWN
DRAWING CODE: LR 5,6-12,1
DATE

AQUATIC NUISANCE SPECIES CONTROL REPORT
WABASH-MAUMEE BASIN
FORT WAYNE, INDIANA

ALTERNATIVE C
ENLARGED RIGHT OF WAY
PLAN

SHEET REFERENCE NUMBER:
RW104
SHEET 28 OF 38

FINAL SUBMITTAL

FILE: \\lrl-fs01lou\Org\ED\Public\CAD\Civil\114597\CADD\114597RW104.DGN
DATE: 30-MAY-2012 12:03

GENERAL SHEET NOTES

1. FOR REFERENCE ONLY.

SHEET KEYNOTES

LEGEND

RWTWE — TEMPORARY WORK EASEMENT

RWLVE — LEVEE RIGHT OF WAY

A1 ALTERNATIVE D CONSTRUCT PERMEABLE BERM WITH TELEMETERED SLUICE GATES RIGHT OF WAY PLAN

1"=300'

N

0 300' 600'

US ARMY CORPS OF ENGINEERS
LOUISVILLE DISTRICT

SYMBOL	REVISIONS DESCRIPTION	DATE	APPR.

DESIGNED BY: B. JENNINGS
DRAWN BY: C. ROBINSON
CHECKED BY: B. DORSCH
B. JENNINGS, P.E.
PROJECT ENGINEER/ARCHITECT

DATE: FEBRUARY 2012
SCALE: AS SHOWN
DRAWING CODE: LR 5,6-12,1
DATE

AQUATIC NUISANCE SPECIES
CONTROL PROJECT
WABASH-MAUMEE BASIN
FORT WAYNE, INDIANA

ALTERNATIVE D
RIGHT OF WAY PLAN

SHEET REFERENCE NUMBER:
RW105

SHEET 29 OF 38

FINAL SUBMITTAL

FILE: \\lrl-fs01lou\Org\ED\Public\CAD\Civil\114597\CADD\114597RW105.DGN
DATE: 30-MAY-2012 12:03

A1 ALTERNATIVE D CONSTRUCT PERMEABLE BERM WITH TELEMETERED SLUICE GATES ENLARGED RIGHT OF WAY PLAN

1"=100'

GENERAL SHEET NOTES

1. FOR REFERENCE ONLY.

RWLVE = 14.9 ACRES
RWRDE = 0.2 ACRES
RWTWE = 7.4 ACRES

SHEET KEYNOTES

LEGEND

RWTWE — TEMPORARY WORK EASEMENT

RWLVE — LEVEE RIGHT OF WAY

US ARMY CORPS OF ENGINEERS
LOUISVILLE DISTRICT

SYMBOL	REVISIONS DESCRIPTION	DATE	APPR.

DESIGNED BY: B. JENNINGS
DATE: FEBRUARY 2012
DRAWN BY: C. ROBINSON
SCALE: AS SHOWN
CHECKED BY: B. DORSCH
DRAWING CODE: LR 5,6-12,1
B. JENNINGS, P.E.
PROJECT ENGINEER/ARCHITECT
DATE

AQUATIC NUISANCE SPECIES CONTROL PILOT PROJECT
WABASH-MAUMEE BASIN
FORT WAYNE, INDIANA

ALTERNATIVE D
ENLARGED RIGHT OF WAY
PLAN

SHEET REFERENCE NUMBER:
RW106
SHEET 30 OF 38

FINAL SUBMITTAL

FILE: \\lrl-fs01lou\Org\ED\Public\CAD\Civil\114597\CADD\114597RW106.DGN
DATE: 30-MAY-2012 12:03

GENERAL SHEET NOTES

1. FOR REFERENCE ONLY.

RWLVE = 15.51 ACRES
RWTWE = 22.15 ACRES

SHEET KEYNOTES

LEGEND

RWTWE — TEMPORARY WORK EASEMENT

RWLVE — LEVEE RIGHT OF WAY

A1 ALTERNATIVE E CONSTRUCT FENCE / EARTHEN BERM COMBINATION RIGHT OF WAY PLAN

1"=300'

N

0 300' 600'

US ARMY CORPS OF ENGINEERS
LOUISVILLE DISTRICT

SYMBOL	DESCRIPTION	DATE	APPR.

REVISIONS

DESIGNED BY: B. JENNINGS
DRAWN BY: C. ROBINSON
CHECKED BY: B. DORSCH
B. JENNINGS, P.E.
PROJECT ENGINEER/ARCHITECT

DATE: FEBRUARY 2012
SCALE: AS SHOWN
DRAWING CODE: LR 5,6-12,1
DATE

AQUATIC NUISANCE SPECIES CONTROL PROJECT
WABASH-MAUMEE BASIN
FORT WAYNE, INDIANA

ALTERNATIVE E
RIGHT OF WAY PLAN

SHEET REFERENCE NUMBER:
RW107

SHEET 31 OF 38

FINAL SUBMITTAL

FILE: \\lrl-fs01lou\Org\ED\Public\CAD\Civil\114597\CADD\114597RW107.DGN
DATE: 30-MAY-2012 12:04

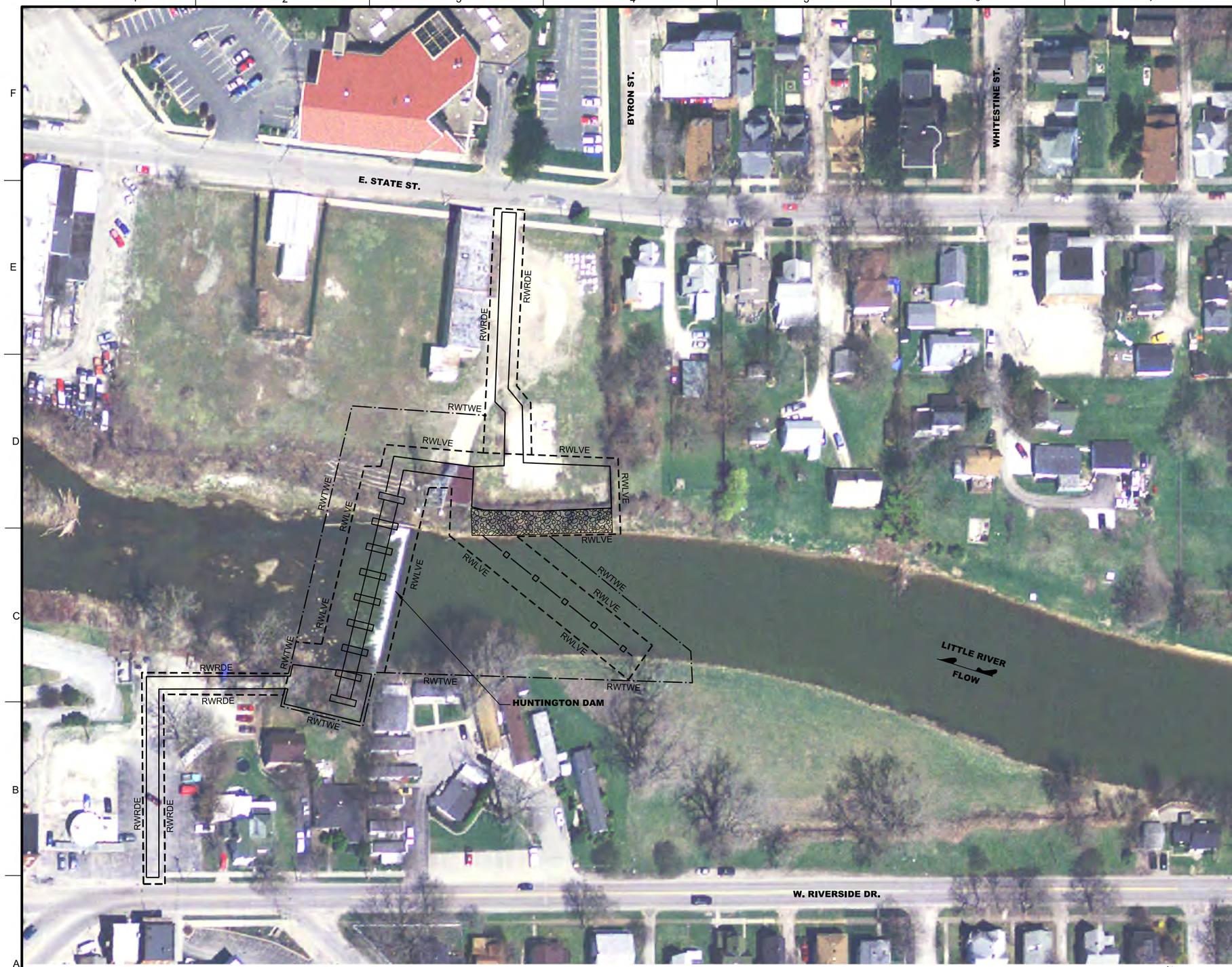

A1 ALTERNATIVE F CONSTRUCT BAR SCREEN BARRIER AT EXISTING WEIR RIGHT OF WAY PLAN

1"=50'

N

0 50' 100'

GENERAL SHEET NOTES

1. FOR REFERENCE ONLY.

RWLVE = 0.9 ACRES
RWTWE = 0.7 ACRES
RWRDE = 0.3 ACRES

SHEET KEYNOTES

LEGEND

RWTWE — TEMPORARY WORK EASEMENT

RWLVE — LEVEE RIGHT OF WAY

US ARMY CORPS OF ENGINEERS
LOUISVILLE DISTRICT

SYMBOL	REVISIONS DESCRIPTION	DATE	APPR.

DESIGNED BY: B. JENNINGS
DATE: FEBRUARY 2012
DRAWN BY: C. ROBINSON
SCALE: 1"=50'
CHECKED BY: B. DORSCH
DRAWING CODE: LR 5,6-12,1
B. JENNINGS, P.E.
PROJECT ENGINEER/ARCHITECT
DATE

AQUATIC NUISANCE SPECIES CONTROL FEASIBILITY STUDY
WABASH-MAUMEE BASIN
FORT WAYNE, INDIANA

ALTERNATIVE F
RIGHT OF WAY PLAN

SHEET REFERENCE NUMBER:
RW108
SHEET 32 OF 38

FINAL SUBMITTAL

FILE: \\lrl-fs01lou\Org\ED\Public\CAD\Civil\114597\CADD\114597RW108.DGN
DATE: 30-MAY-2012 12:04

A1 ALTERNATIVE G CONSTRUCT VERTICAL DROP STRUCTURES W/ TELEMETERED SLUICE GATE - RIGHT OF WAY PLAN

1"=300'

GENERAL SHEET NOTES

1. FOR REFERENCE ONLY.

SHEET KEYNOTES

LEGEND

RWTWE — TEMPORARY WORK EASEMENT

RWLVE — LEVEE RIGHT OF WAY

US ARMY CORPS OF ENGINEERS
LOUISVILLE DISTRICT

SYMBOL	DESCRIPTION	DATE	APPR.

REVISIONS

DESIGNED BY: B. JENNINGS
DATE: FEBRUARY 2012
DRAWN BY: C. ROBINSON
SCALE: AS SHOWN
CHECKED BY: B. DORSCH
DRAWING CODE: LR 5.6-12.1
B. JENNINGS, P.E.
PROJECT ENGINEER/ARCHITECT
DATE

AQUATIC NUISANCE SPECIES
CONTROL PROJECT
WABASH-MAUMEE BASIN
FORT WAYNE, INDIANA

ALTERNATIVE G
RIGHT OF WAY PLAN

SHEET REFERENCE NUMBER:
RW109

SHEET 33 OF 38

FINAL SUBMITTAL

FILE: \\lrl-fs01lou\Org\ED\Public\CAD\Civil\114597\CADD\114597RW109.DGN
DATE: 30-MAY-2012 12:05

A1 ALTERNATIVE G CONSTRUCT VERTICAL DROP STRUCTURES W/ TELEMETERED SLUICE GATE - ENLARGED RIGHT OF WAY PLAN

1"=100'

N

0 100' 200'

GENERAL SHEET NOTES

1. FOR REFERENCE ONLY.

RWLVE = 2.3 ACRES
RWTWE = 1.5 ACRES

SHEET KEYNOTES

LEGEND

RWTWE — TEMPORARY WORK EASEMENT

RWLVE — LEVEE RIGHT OF WAY

US ARMY CORPS OF ENGINEERS
LOUISVILLE DISTRICT

SYMBOL	REVISIONS DESCRIPTION	DATE	APPR.

DESIGNED BY: B. JENNINGS
DATE: FEBRUARY 2012
DRAWN BY: C. ROBINSON
SCALE: AS SHOWN
CHECKED BY: B. DORSCH
DRAWING CODE: LR 5,6-12,1
B. JENNINGS, P.E.
PROJECT ENGINEER/ARCHITECT
DATE

AQUATIC NUISANCE SPECIES CONTROL ALTERNATIVES
WABASH-MAUMEE BASIN
FORT WAYNE, INDIANA

ALTERNATIVE G
ENLARGED RIGHT OF WAY PLAN

SHEET REFERENCE NUMBER:
RW110
SHEET 34 OF 38

FINAL SUBMITTAL

FILE: \\lrl-fs01lou\Org\ED\Public\CAD\Civil\114597\CADD\114597RW110.DGN
DATE: 30-MAY-2012 12:05

GENERAL SHEET NOTES

1. FOR REFERENCE ONLY.

RWLVE = 16.29 ACRES (TOTAL SH. RW111 & RW 112)
RWTWE = 30.23 ACRES (TOTAL SH. RW111 & RW 112)

SHEET KEYNOTES

LEGEND

RWTWE — TEMPORARY WORK EASEMENT

RWLVE — LEVEE RIGHT OF WAY

A1 ALTERNATIVE H RECONSTRUCT LEFT DESCENDING GRAHAM McCULLOCH DITCH BERM - RIGHT OF WAY PLAN

1"=300'

N

0 300' 600'

US ARMY CORPS OF ENGINEERS
LOUISVILLE DISTRICT

SYMBOL	REVISIONS DESCRIPTION	DATE	APPR.

DESIGNED BY: B. JENNINGS
DRAWN BY: C. ROBINSON
CHECKED BY: B. DORSCH
B. JENNINGS, P.E.
PROJECT ENGINEER/ARCHITECT

DATE: FEBRUARY 2012
SCALE: AS SHOWN
DRAWING CODE: LR 5,6-12,1
DATE

AQUATIC NUISANCE SPECIES CONTROL PROJECT
WABASH-MAUMEE BASIN
FORT WAYNE, INDIANA

ALTERNATIVE H
RIGHT OF WAY PLAN
(SH. 1 OF 2)

SHEET REFERENCE NUMBER:
RW111

SHEET 35 OF 38

FINAL SUBMITTAL

FILE: \\lrl-fs01lou\Org\ED\Public\CAD\Civil\114597\CADD\114597RW111.DGN
DATE: 30-MAY-2012 12:06

A1 ALTERNATIVE H RECONSTRUCT LEFT DESCENDING GRAHAM McCULLOCH DITCH BERM - RIGHT OF WAY PLAN

1"=300'

GENERAL SHEET NOTES

1. FOR REFERENCE ONLY.

SHEET KEYNOTES

LEGEND

RWTWE — TEMPORARY WORK EASEMENT

RWLVE — LEVEE RIGHT OF WAY

US ARMY CORPS OF ENGINEERS
LOUISVILLE DISTRICT

SYMBOL	DESCRIPTION	DATE	APPR.

REVISIONS

DESIGNED BY: B. JENNINGS
DRAWN BY: C. ROBINSON
CHECKED BY: B. DORSCH
B. JENNINGS, P.E.
PROJECT ENGINEER/ARCHITECT

DATE: FEBRUARY 2012
SCALE: AS SHOWN
DRAWING CODE: LR 5,6-12,1
DATE

AQUATIC NUISANCE SPECIES CONTROL REPORT
WABASH-MAUMEE BASIN
FORT WAYNE, INDIANA

ALTERNATIVE H
RIGHT OF WAY PLAN
(SH. 2 OF 2)

SHEET REFERENCE NUMBER:
RW112

SHEET 36 OF 38

FINAL SUBMITTAL

FILE: \\lrl-fs01lou\Org\ED\Public\CAD\Civil\114597\CADD\114597RW112.DGN
DATE: 30-MAY-2012 12:06

GENERAL SHEET NOTES

1. FOR REFERENCE ONLY.

RWLVE = 24.31 ACRES (TOTAL SH. RW113 & RW114)
RWTWE = 32.95 ACRES (TOTAL SH. RW113 & RW114)

SHEET KEYNOTES

LEGEND

RWTWE — TEMPORARY WORK EASEMENT

RWLVE — LEVEE RIGHT OF WAY

ALTERNATIVE I RECONSTRUCT LEFT DESCENDING GRAHAM McCULLOCH DITCH BERM, DEMOLISH RIGHT DESCENDING BERM AND CONSTRUCT MULTI-CELL WETLAND AREA - RIGHT OF WAY PLAN

A1

1"=300'

N

0 300' 600'

US ARMY CORPS OF ENGINEERS
LOUISVILLE DISTRICT

SYMBOL	DESCRIPTION	DATE	APPR.
	REVISIONS		

DESIGNED BY: B. JENNINGS
DRAWN BY: C. ROBINSON
CHECKED BY: B. DORSCH
B. JENNINGS, P.E.
PROJECT ENGINEER/ARCHITECT
DATE

DATE: FEBRUARY 2012
SCALE: AS SHOWN
DRAWING CODE: LR 5,6-12,1

AQUATIC NUISANCE SPECIES CONTROL PILOT PROJECT
WABASH-MAUMEE BASIN
FORT WAYNE, INDIANA

ALTERNATIVE I
RIGHT OF WAY PLAN
(SH. 1 OF 2)

SHEET REFERENCE NUMBER:
RW113

SHEET 37 OF 38

FINAL SUBMITTAL

FILE: \\lrl-fs01lou\Org\ED\Public\CAD\Civil\114597\CADD\114597RW113.DGN
DATE: 30-MAY-2012 12:07

GENERAL SHEET NOTES

1. FOR REFERENCE ONLY.

SHEET KEYNOTES

LEGEND

RWTWE — TEMPORARY WORK EASEMENT

RWLVE — LEVEE RIGHT OF WAY

A1

ALTERNATIVE I RECONSTRUCT LEFT DESCENDING GRAHAM McCULLOCH DITCH BERM,
DEMOLISH RIGHT DESCENDING BERM AND CONSTRUCT VEGETATION FILTER STRIP - RIGHT OF WAY PLAN

1"=300'

N

0 300' 600'

US ARMY CORPS OF ENGINEERS
LOUISVILLE DISTRICT

SYMBOL	REVISIONS DESCRIPTION	DATE	APPR.

DESIGNED BY: B. JENNINGS
DRAWN BY: C. ROBINSON
CHECKED BY: B. DORSCH
B. JENNINGS, P.E.
PROJECT ENGINEER/ARCHITECT

DATE: FEBRUARY 2012
SCALE: AS SHOWN
DRAWING CODE: LR 5,6-12,1
DATE

AQUATIC NUISANCE SPECIES
CONTROL PROJECT
WABASH-MAUMEE BASIN
FORT WAYNE, INDIANA

ALTERNATIVE I
RIGHT OF WAY PLAN
(SH. 2 OF 2)

SHEET REFERENCE NUMBER:
RW114
SHEET 38 OF 38

FINAL SUBMITTAL

FILE: \\lrl-fs01lou\Org\ED\Public\CAD\Civil\114597\CADD\114597RW114.DGN
DATE: 30-MAY-2012 12:08